# เอกสารแนบ 6

## เอกสารสอบเทียบเครื่องมือที่ใช้ในการวิเคราะห์

ENTECH
Where Solutions Begin

# Calibration Certificate

NSC-TISI-TIS 17025 CALIBRATION 0157

**Certificate No. : T/O 660198**

**The Reference Standard Instrument :-**

| Instrument | Model | Serial No. | Cert No. | |
|---|---|---|---|---|
| 1) Data logger with RTD Probe | Agilent 34972A | MY41187730 | PSL-T 0651-1/66 | 21-Apr-2024 |
| | | MY60008352 | PSL-T 0651-3/66 | 21-Apr-2024 |

**Measured room conditions**

| | | | | |
|---|---|---|---|---|
| **Temperature :** | Minimum: | 30.8 °C | Maximum: | 31.9 °C |
| **Humidity :** | Minimum: | 50.7 %RH | Maximum: | 57.2 %RH |
| **Voltage :** | Minimum: | 219.8 VAC | Maximum: | 223.4 VAC |
| **Fresh Air Setting:** | off | | | |

**Sensor Position :**

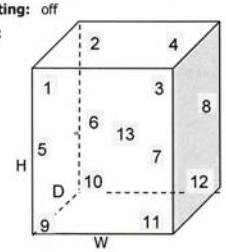


**Working Space of chamber :**

(Inside Dimensions) W x D x H : 1560 mm x 500 mm x 1380 mm

**Sensor Installation Details :**

- Sensor Number 1 to 12 installed approximately 50 mm From each wall.
- Sensor Number 13 installed approximately geometric of the chamber.

**Results** : The measurement results of the calibration were reported in the table below.
( * ) Without adjustment ( ) After adjustment

| UUC* Setting | UUC* Reading | Temperature Reading oF Standard Sensor | | | | | | | | |
|---|---|---|---|---|---|---|---|---|---|---|
| | | Sensor Position | | | | | | | | |
| ( °C ) | ( °C ) | 1 | 2 | 3 | 4 | 5 | 6 | 7 | 8 | 9 |
| 4.0 | 4.1 | 4.02 | 4.35 | 4.01 | 4.20 | 4.37 | 4.22 | 4.17 | 4.39 | 4.05 |
| | | Sensor Position | | | | | | | | |
| | | 10 | 11 | 12 | 13 | | | | | |
| | | 4.29 | 4.30 | 4.28 | 4.19 | | | | | |

| UUC* Setting | UUC* Reading | Temperature Uniformity | Temperature Stability | Overall Variation | Uncertainty of Measurement | Coverage Factor |
|---|---|---|---|---|---|---|
| ( °C ) | ( °C ) | (°C) | (± °C) | (°C) | (± °C) | K |
| 4.0 | 4.1 | 1.19 | 1.08 | 2.47 | 1.5 | 2 |

**UUC* = Unit Under Calibration**

**Remark :-**

- Temperature reading of Standard Sensors shown in the table were taken from the average of Standard reading at each position.
- Temperature Uniformity was calculated from the difference between the maximum and minimum of actual temperature reading from all reference sensors at the same time.
- Temperature Stability was calculated from the maximum stability of nine positions, and formula of Stability is [ ( Maximum Temperature Value - Minimum Temperature Value ) /2 ]
- Overall Variation was calculated from the difference between the maximum and minimum measured temperature throughout observation time.

**End of Report**




Entech Industrial Solution Co.,Ltd.
17/121 Soi Ngamwongwan 47 Yaek 48, Toongsonghong, Laksi, Bangkok 10210 THAILAND Tel. 0-2779-8888 Calibration@entech.co.th
Tax ID : 0105536035591 www.entech.co.th



ENTECH
Where Solutions Begin

Calibration Certificate

NSC-TISI-TIS 17025 CALIBRATION 0157


**Certificate No.: T/O 660198**
**Date of issue :** 11-Oct-2023

| | | |
|---|---|---|
| **Equipment Description** | : | Refrigerator |
| **Equipment Model** | : | P1010 |
| **Equipment Serial No.** | : | P1010-1020-0005 |
| **I.D. No. or Control No.** | : | TNP.LAB.01 |
| **Manufacturer** | : | Entech Industrial Solution Co.,Ltd. |
| **Customer Name** | : | TNP ENVIRONMENT CO.,LTD. |
| **Customer Address** | | 332/173 Moo. 3 Tambon Bang Rak Phatthana, Amphoe Bang Bua Thong, |
| | : | Nonthaburi 11110 |
| **Total pages of certificate** | : | 2 pages |
| **Instrument Receiving Date** | : | 9-Oct-2023 |
| **Receiving No.** | : | O-230230 |
| **Environmental Conditions** | : | All of the measurement were carried out in the working area |
| | | Temperature : ( 25 ± 15 ) °C |
| | | Humidity : ( 55 ± 30 ) % RH |
| | | Voltage : ( 220 ± 22 ) VAC |
| **Calibration Place** | : | 332/173 Moo. 3 Tambon Bang Rak Phatthana, Amphoe Bang Bua Thong, |
| | | Nonthaburi 11110 |
| **Calibration Procedure No.** | : | This instrument was calibrated by comparison of reference radiation source standard according to calibration work instration no WI-CL-18-C |

*The calibration certificate expended uncertainty of measurement is stated as the standard uncertainty of measurement multiplied by the coverage factor k, which for a normal distribution corresponds to a coverage probability of approximately 95%*

*The standard uncertainty of measurement has been determined in accordance with M 3003 The expression uncertainty and confidence in measurement.*

*This certificate is applied only to item under test environmental condition.*

*This calibration certificate may not be reproduced other than in full except with the permission of the issuing laboratory. Calibration certificates without signature and seal are not valid.*

*This calibration certificate documents are traceability to national standards, which realize the unit of measurement according to the International system of units (SI).*

**Date of Calibration** : 9-Oct-2023

[redacted]




Entech Industrial Solution Co.,Ltd.
17/121 Soi Ngamwongwan 47 Yaek 48, Toongsonghong, Laksi, Bangkok 10210 THAILAND Tel. 0-2779-8888 Calibration@entech.co.th
Tax ID : 0105536035591 www.entech.co.th

CALIBRATION LABORATORY CO., LTD.
2/10-11,14,55 Soi Prasert Manukit 29 Yaek 4, Prasert Manukit Rd., Ladphrao, Bangkok 10230
Tel. 02-578-0353-4 Fax: 02-578-2672 www.cal-laboratory.com E-mail:sale@cal-laboratory.com

# REPORT OF CALIBRATION

## FOR

| | | |
|---|---|---|
| NOMENCLATURE | : | pH METER |
| MANUFACTURER | : | HORIBA |
| MODEL / TYPE | : | LAQUA-PH1100/9615S |
| SERIAL NO. | : | B80A0042/9X0B0575 |
| DATE OF CALIBRATION | : | 12 September 2023 |

**ENVIRONMENT CONDITIONS :**

**Temperature :** (25 ± 2.5 ) °C **Relative Humidity :** (50 ± 15) % RH

**PROCEDURE USED :**

This instrument was calibrated under procedure No. **CLC-CPCH-01.** The calibration was performed by direct measurement with Certified Reference Material (CRM).

**REFERENCE STANDARD USED :**

1. pH Standard Solution, NIMT TRM CODE TRM-S-2003, TRM CODE TRM-S-2007.
2. pH Standard Solution, Control Company Catalog Number 06664263,11784256, Lot Number CC752722.

**TRACEABILITY :**

1. The measurements are traceable to International System of Units (SI) , through National Institute of Metrology (Thailand). Lot Number. 040822 , 230822. Due Date 26 April 2024.
2. The measurements are traceable to International System of Units (SI) , through Control Company. Certificate No. 4288-13355261 , Due Date 06 May 2024.

**UNCERTAINTY :**

The reported expanded uncertainty of measurement is stated as the standard uncertainty of measurement multiplied by the coverage factor complies with the table which for a normal distribution corresponds to a coverage probability of approximately 95 %. It has been evaluated according to the "Evaluation of the Uncertainty of Measurement in Calibration (EA-4/02 M:2022)"



@clccalibration

CALIBRATION LABORATORY CO., LTD.
2/10-11,14,55 Soi Prasert Manukit 29 Yaek 4, Prasert Manukit Rd., Ladphrao, Bangkok 10230
Tel. 02-578-0353-4 Fax: 02-578-2672 www.cal-laboratory.com E-mail:sale@cal-laboratory.com

# CERTIFICATE OF CALIBRATION

## FOR

| | | |
|---|---|---|
| NOMENCLATURE | : | pH METER |
| MANUFACTURER | : | HORIBA |
| MODEL / TYPE | : | LAQUA-PH1100/9615S |
| SERIAL NO. | : | B80A0042/9X0B0575 |
| CLID. NO. | : | 272001452 |
| JOB CONTROL NO. | : | 230911100397 |

CUSTOMER : TNP ENVIRONMENT CO., LTD.
332/173 MOO 3 TAMBON BANG RAK PHATTANA,
AMPHOE BANG BUA THONG, NONTHABURI 11110

DATE OF RECEIVED : 11 September 2023 DATE OF ISSUED : 14 September 2023

Report of calibration screening must not be taken in part. Except complete. Without the approval of the Calibration Laboratory Co., Ltd.

**Calibrated By :** Sukgasem Seehanart
Calibration Engineer

**Approved By :** [redacted]

14 September 2023

This Calibration Certificate documents the traceability to national standards, which realize the units of measurement according to the International System of Units ( SI )



@clccalibration

น.6/2

CALIBRATION LABORATORY CO., LTD.
2/10-11,14,55 Soi Prasert Manukit 29 Yaek 4, Prasert Manukit Rd., Ladphrao, Bangkok 10230
Tel. 02-578-0353-4 Fax: 02-578-2672 www.cal-laboratory.com E-mail:sale@cal-laboratory.com

# CERTIFICATE OF CALIBRATION

## FOR

| | | |
|---|---|---|
| NOMENCLATURE | : | DIGITAL THERMO-HYGROMETER |
| MANUFACTURER | : | EXTECH INSTRUMENTS |
| MODEL / TYPE | : | 445814 |
| SERIAL NO. | : | PONPE5816745 |
| CLID. NO. | : | 232303263 |
| JOB CONTROL NO. | : | 230911100396 |

CUSTOMER : TNP ENVIRONMENT CO., LTD.
332/173 MOO 3 TAMBON BANG RAK PHATTANA,
AMPHOE BANG BUA THONG, NONTHABURI 11110

DATE OF RECEIVED : 11 September 2023 DATE OF ISSUED : 15 September 2023

Report of calibration screening must not be taken in part. Except complete. Without the approval of the Calibration Laboratory Co., Ltd.

Calibrated By : Oranut Kamchatphai
Calibration Engineer

Approved By : [redacted]

15 September 2023

This Calibration Certificate documents the traceability to national standards, which realize the units of measurement according to the International System of Units ( SI )



@clccalibration

CALIBRATION LABORATORY CO., LTD.
2/10-11,14,55 Soi Prasert Manukit 29 Yaek 4, Prasert Manukit Rd., Ladphrao, Bangkok 10230
Tel. 02-578-0353-4 Fax: 02-578-2672 www.cal-laboratory.com E-mail:sale@cal-laboratory.com

CONDITION OF CALIBRATION ITEM : GOOD

MEASUREMENT RESULTS : ( X ) without adjustment ( ) adjustment

The table in the following gives the calibration results and associated measurement uncertainties of pH meter.

**CALIBRATION DATA**

pH METER RESULT @ 25 °C

| Standard pH Buffer Solution (pH) | pH Meter Reading (pH) | pH Meter Reading (mV) | Correction (pH) | Uncertainty of pH Measurement (± pH) | *k* Factor |
|---|---|---|---|---|---|
| 4.003 | 4.01 | 150.2 | -0.007 | 0.010 | 2,00 |
| 7.000 | 7.00 | -26.1 | 0.000 | 0.015 | 2,06 |
| 10.003 | 10.01 | -187.1 | -0.007 | 0.016 | 2,05 |

Technical Note. Setting function CAL 3 point ( 4,7,10 ).

The Scope of Accredited ANAB Certificate No. ACDM-2814 Version 008 Page 2,3 of 54

This report is valid for the above stated instrument/s only.

### End of Certificate ###



@clccalibration

น.6/3

**CONDITION OF CALIBRATION ITEM : GOOD**

**MEASUREMENT RESULTS : ( X ) without adjustment ( ) adjustment**

The table in the following gives the calibration results and associated measurement uncertainties of the measuring digital thermo-hygrometer.

**CALIBRATION DATA**

**1. CORRECTION OF TEMPERATURE**

| Test point (°C) | Actual Temperature (°C) | DUC Reading (°C) | Correction (°C) | Uncertainty ±(°C) |
|---|---|---|---|---|
| 20.0 | 20.01 | 19.9 | +0.11 | 0.27 |
| 25.0 | 25.01 | 25.2 | -0.19 | |

**2. CORRECTION OF HUMIDITY**

| STD Temperature (°C) | STD Reading (%RH) | DUC Reading (%RH) | Correction (%RH) | Uncertainty ± (%RH) |
|---|---|---|---|---|
| 25 | 50.0 | 47 | +3.0 | 0.8 |

Note. The Scope of Accredited ANAB Certificate No. ACDM-2814 Version 008 Page 49 of 54

**This report is valid for the above stated instrument/s only.**

**### End of Certificate ###**



CALIBRATION LABORATORY CO., LTD.
2/10-11,14,55 Soi Prasert Manukit 29 Yaek 4, Prasert Manukit Rd., Ladphrao, Bangkok 10230
Tel. 02-578-0353-4 Fax: 02-578-2672 www.cal-laboratory.com E-mail:sale@cal-laboratory.com
CLC Accredited ISO/IEC 17025
ilac-MRA
ANAB ANSI National Accreditation Board ACCREDITED ISO/IEC 17025 CALIBRATION AND DIMENSIONAL MEASUREMENT ACDM-2814

# REPORT OF CALIBRATION

## FOR

| | | |
|---|---|---|
| **NOMENCLATURE** | : | **DIGITAL THERMO-HYGROMETER** |
| **MANUFACTURER** | : | **EXTECH INSTRUMENTS** |
| **MODEL / TYPE** | : | **445814** |
| **SERIAL NO.** | : | **PONPE5816745** |
| **DATE OF CALIBRATION** | : | **13 September 2023** |

**ENVIRONMENT CONDITIONS :**

**Temperature : (23 ± 2) °C** **Relative Humidity : (55 ± 10) %RH**

**PROCEDURE USED :**

This instrument was calibrated under procedure No. **CLC-CPTH-11.** The calibration was performed by using Chilled Mirror Hygrometer and Temperature & Humidity Chamber which maintained by the Calibration Laboratory Co., Ltd.

**REFERENCE STANDARD USED :**

Chilled Mirror Hygrometer, Edgetech Model Dew Master S/N. 36151.

Temperature & Humidity Chamber, PGC Model 9141-5114 S/N.0802282.

**TRACEABILITY :**

The measurements are traceable to International System of Units (SI) , through Thunder Scientific Corporation.

Certificate No. 21028, Due Date 09 December 2023.

**UNCERTAINTY :**

The reported expanded uncertainty of measurement is stated as the standard uncertainty of measurement multiplied by the coverage factor $k = 2{,}00$ which for a normal distribution corresponds to a coverage probability of approximately 95 %.

It has been evaluated according to the "Evaluation of the Uncertainty of Measurement in Calibration (EA-4/02 M:2022)"



น.6/4

CAL
Calibratech Co.,Ltd.
7/106-7 Moo 2, Sukhaprachasan 3 Rd., Bangpood, Pakkred, Nonthaburi 11120
Tel.(02) 964-6211 Fax.(02) 964-5155, e-mail : calibratech_cal@yahoo.com, calibratech_cal@hotmail.com

# Certificate of Calibration

**Certificate No. :** **67-400049-1**



**Result of Calibration :** Without Adjustment

**UUC Condition As-Received :** Good

**Function :** Temperature measurement

Ice point check : UUC* reading 0 ° C Standard reading 0.8789 °C

| Standard Reading (°C) | UUC Reading (°C) | Correction (°C) | Uncertainty (±°C) |
|---|---|---|---|
| 21.2064 | 20 | 1.2 | 0.31 |
| 31.3084 | 30 | 1.3 | 0.31 |

Remark

UUC : Unit Under Calibration

This result of calibration was found accurate as shown on date and place of calibration only.

This reported uncertainty of measurement was based on a standard uncertainty multiplied by a coverage factor k = 2 , providing a level of confidence of approximately 95%

- o0o -

[redacted]



CAL
Calibratech Co.,Ltd.
7/106-7 Moo 2, Sukhaprachasan 3 Rd., Bangpood, Pakkred, Nonthaburi 11120
Tel.(02) 964-6211 Fax.(02) 964-5155, e-mail : calibratech_cal@yahoo.com, calibratech_cal@hotmail.com

NSC-TISI-TIS17025
CALIBRATION 0030

# Certificate of Calibration

**Certificate No. :** **67-400049-1**



**Submitted by :** TNP Environment Co., Ltd.
332/173 Moo 3 Bang Rak Phatthana, Bang Bua Thong, Nonthaburi 11110

**Equipment :** Liquid in Glass Thermometer

Manufacturer : SK — Model : N/A
Range : 0 °C to 200 °C — Resolution : 1 °C
Serial No. : N/A — Immersion : Total
ID No. : TNP.LAB.12

**Environment :**
Ambient Temperature : (23 ± 2) °C
Relative Humidity : (50 ± 15) %
Line Voltage : (220 ± 22) VAC

**Date of Received :** 26 January 2024
**Date of Calibration :** 01 February to 02 February 2024
**Date of Issue :** 02 February 2024
**Calibrated by :** Chortip Samchusri

**Calibration Method :** This instrument was calibrated by In-house method comparison technique CAL-M4001 based on ASTM E77-07 by compared with PRT in the liquid bath at the constant controlled temperature.

The temperature scale used was based on ITS-90

**Reference Standard Instruments :** This certification is traceable to the International System of Units

1. Platinum Resistance Thermometer (PRT)

| ID No. | Cert. No. | Due Date | Traceability |
|---|---|---|---|
| 400001 | TT-0016-22 | 07 Feb 2024 | National Institute of Metrology Thailand (NIMT) |

2. Standard Digital Thermometer

| ID No. | Cert. No. | Due Date | Traceability |
|---|---|---|---|
| 400003 | 23E1866 | 01 Jun 2025 | National Institute of Metrology Thailand (NIMT) |
| 400004 | 23E1866 | 01 Jun 2025 | National Institute of Metrology Thailand (NIMT) |

Approved by [redacted]
Laboratory Manager

The Uncertainties are for a confidence probability of approximately 95%

This cerificate may not be reproduced other than in full except with the prior written approval of the Calibratech Co.,Ltd.

ENTECH Where Solutions Begin

# Calibration Certificate

NSC-TISI-TIS 17025 CALIBRATION 0157

**Certificate no:** H/T 670338

**Standard refereces**

| Standard | Reference No. | Vendor | Due Date |
|---|---|---|---|
| ARALAB 300ECP,Fitoclima | S2023070040-001 | MIT | 07-Jul-24 |
| Thermo HygroPalm HP 23-A | SG-H-00579/66 | Success Gateway | 16-Aug-24 |

**Measured room conditions**

**Temperature :** 22.1 **°C** **Humidity :** 55.9 **%RH** **Pressure :** 1019.3 **mbar**

**Calibration results (Without Adjustment)** **Reference temperature :** - **°C**

| Parameter of standard | Standard values | Mean of UUC. | Error | Uncertainty (±) |
|---|---|---|---|---|
| Temperature (°C) | 19.97 | 20.1 | 0.13 | 0.50 |
| Temperature (°C) | 25.02 | 25.2 | 0.18 | 0.50 |
| Temperature (°C) | 29.99 | 30.2 | 0.21 | 0.50 |

**Remark :** -

**End of Report**



Entech Industrial Solution Co.,Ltd.
17/121 Soi Ngamwongwan 47 Yaek 48, Toongsonghong, Laksi, Bangkok 10210 THAILAND Tel. 0-2779-8888 Calibration@entech.co.th
Tax ID : 0105536035591 www.entech.co.th

ENTECH Where Solutions Begin

Calibration Certificate

NSC-TISI-TIS 17025 CALIBRATION 0157

**Certificate no:** H/T 670338
**Date of issue :** 21-Mar-24

| | | |
|---|---|---|
| **Instrument description** | : | Thermo-Hygrometer |
| **Instrument model** | : | Extech 445815 |
| **Instrument serial no.** | : | PONPE5899554 |
| **ID no. or control no.** | : | TNP.LAB.21 |
| **Manufacturer** | : | Extech Instruments |
| **Probe description** | : | - |
| **Probe model** | : | - |
| **Probe serial** | : | - |
| **Customer name** | : | TNP ENVIRONMENT CO.,LTD. |
| **Customer address** | : | 332/173 Moo 3 Tambon Bang Rak Phatthana, Amphoe Bang Bua Thong, Nonthaburi 11110 |
| **Total pages of certificate** | : | 2 Pages |
| **Receiving no.** | : | L-241004-1 |
| **Receiving date.** | : | 08-Mar-24 |
| **Parameter of calibration** | : | Temperature Calibration |
| **Condition of UUC.** | : | Used |
| **Ambient condition** | : | All of the Measurement were carried out the stabilized laboratory<br>Temperature : 23 ±5 °C<br>Humidity : 55 ± 15 %RH |
| **Calibration place** | : | 17/121 Soi Ngamwongwan 47 Yaek 48, Toongsonghong, Laksi, Bangkok 10210 |
| **Calibration procedure no.** | : | This instrument was calibrated by comparison of indication with the Standard Thermo- hygrometer according to calibration Work Instruction no .WI-CL-11-C |

*The calibration certificate expanded uncertainty of measurement is stated as the standard uncertainty of measurent Multiplied by coverage factor k=2, which for a normal distribution corresponds to a coverage probability of approximately 95%.*

*This certificate is applied only to item under test Environmental condition.*

*This Calibration Certificate may not be reporduced other than in full except with the permission of the issuing laboratory. Calibration certificates without signature and seal not valid.*

*This calibration certificate documents are tracebility to national standards, which realize measurement according to the International System of Units (SI).*

**Date of calibration** : 20-Mar-24

[redacted]



Entech Industrial Solution Co.,Ltd.
17/121 Soi Ngamwongwan 47 Yaek 48, Toongsonghong, Laksi, Bangkok 10210 THAILAND Tel. 0-2779-8888 Calibration@entech.co.th
Tax ID : 0105536035591 www.entech.co.th

น.6/6

ENTECH Where Solutions Begin

# Calibration Certificate

NSC-TISI-TIS 17025 CALIBRATION 0157

**Certificate no:** H 670285

**Standard refereces**

| Standard | Reference No. | Vendor | Due Date |
|---|---|---|---|
| Thermo HygroPalm HP 23-A | SG-H-00579/66 | Success Gateway | 16-Aug-24 |
| Hygrogen 2-XL | Performance | Entech | 24-Mar-24 |

**Measured room conditions**

**Temperature :** 22.7 **°C** **Humidity :** 56.7 **%RH** **Pressure :** 1013.3 **mbar.**

**Calibration results (Without Adjustment)** **Reference temperature :** 25.0 **°C**

| Parameter of standard | Standard values | Mean of UUC. | Error | Uncertainty (±) |
|---|---|---|---|---|
| Humidity (%RH) | 35.09 | 31 | -4.09 | 1.3 |
| Humidity (%RH) | 50.03 | 48 | -2.03 | 1.5 |
| Humidity (%RH) | 64.97 | 68 | 3.03 | 1.5 |

**Remark :** -

**End of Report**



Entech Industrial Solution Co.,Ltd.
17/121 Soi Ngamwongwan 47 Yaek 48, Toongsonghong, Laksi, Bangkok 10210 THAILAND Tel. 0-2779-8888 Calibration@entech.co.th
Tax ID : 0105536035591 www.entech.co.th

ENTECH Where Solutions Begin

# Calibration Certificate

NSC-TISI-TIS 17025 CALIBRATION 0157

**Certificate no:** H 670285
**Date of issue :** 21-Mar-24

| | | |
|---|---|---|
| **Instrument description** | : | Thermo-Hygrometer |
| **Instrument model** | : | Extech 445815 |
| **Instrument serial no.** | : | PONPE5899554 |
| **ID no. or control no.** | : | TNP.LAB.21 |
| **Manufacturer** | : | Extech Instruments |
| **Probe description** | : | - |
| **Probe model** | : | - |
| **Probe serial** | : | - |
| **Customer name** | : | TNP ENVIRONMENT CO.,LTD. |
| **Customer address** | : | 332/173 Moo 3 Tambon Bang Rak Phatthana, Amphoe Bang Bua Thong, Nonthaburi 11110 |
| **Total pages of certificate** | : | 2 Pages |
| **Receiving no.** | : | L-241004 |
| **Receiving date.** | : | 08-Mar-24 |
| **Parameter of calibration** | : | Humidity Calibration |
| **Condition of UUC.** | : | Used |
| **Ambient condition** | : | All of the Measurement were carried out the stabilized laboratory<br>Temperature : 23 ±5 °C<br>Humidity : 55 ± 15 %RH |
| **Calibration place** | : | 17/121 Soi Ngamwongwan 47 Yaek 48, Toongsonghong, Laksi, Bangkok 10210 |
| **Calibration procedure no.** | : | This instrument was calibrated by comparison of indication with the Standard Thermo- hygrometer according to calibration Work Instruction no .WI-CL-11-C |

*The calibration certificate expanded uncertainty of measurement is stated as the standard uncertainty of measurent Multiplied by coverage factor k=2, which for a normal distribution corresponds to a coverage probability of approximately 95%.*

*This certificate is applied only to item under test Environmental condition.*

*This Calibration Certificate may not be reporduced other than in full except with the permission of the issuing laboratory. Calibration certificates without signature and seal not valid.*

*This calibration certificate documents are tracebility to national standards, which realize measurement according to the International System of Units (SI).*

**Date of calibration** : 19-Mar-24

[redacted]



Entech Industrial Solution Co.,Ltd.
17/121 Soi Ngamwongwan 47 Yaek 48, Toongsonghong, Laksi, Bangkok 10210 THAILAND Tel. 0-2779-8888 Calibration@entech.co.th
Tax ID : 0105536035591 www.entech.co.th

**Result of calibration**

| Nominal Value | Conventional mass | | Uncertainty of Measurement (±) | Maximum Permissible error (±) |
|---|---|---|---|---|
| | Before Adjustment | After Adjustment | | |
| 200 g | 199.99986 g | - | 0.30 mg | 1.0 mg |
| 100 g | 100.00015 g | - | 0.16 mg | 0.50 mg |
| 50 g | 50.00015 g | - | 0.10 mg | 0.30 mg |
| 20 g | 20.000116 g | - | 0.080 mg | 0.25 mg |
| 10 g | 10.000041 g | - | 0.060 mg | 0.20 mg |
| 5 g | 5.000010 g | - | 0.050 mg | 0.16 mg |
| 2 g | 1.999936 g | - | 0.040 mg | 0.12 mg |
| 1 g | 0.999973 g | - | 0.030 mg | 0.10 mg |
| 200 mg | 200.059 mg | 200.007 mg | 0.020 mg | 0.060 mg |
| 100 mg | 100.037 mg | 99.981 mg | 0.016 mg | 0.050 mg |

The reported uncertainty of measurement was based on a standard uncertainty multiplied by a coverage factor $k = 2$, providing a level of confidence of approximately 95 %.

-o0o-

[redacted]

a 1151188

TECHNOLOGY PROMOTION ASSOCIATION (THAILAND-JAPAN)
CORPORATE SERVICES 3: EQUIPMENT CALIBRATION AND TESTING SERVICES
534/4 PATTANAKARN ROAD SOI 18, SUANLUANG, SUANLUANG, BANGKOK 10250
TEL. 0-2717-3000-24 FAX. 0-2719-9484

NSC-TISI-TIS17025
CALIBRATION 0008

# Certificate of Calibration



**Equipment :** Standard Weight Set
**Manufacturer:** -
**Model :** Class:F1
**Serial No.:** 15022021-01
**ID No.:** TNP.LAB.25
**Condition As-Received:** Used Item
**Received Date:** 02 March 2023
**Calibration Date:** 04 March 2023

This certificate may not be reproduced other than in full, except with the prior written approval of the head of Corporate Services 3: Equipment Calibration and Testing Services.

**Reference:** 2303-0104WN
**Ambient Temperature:** ( 23 ± 2 ) °C
**Relative Humidity:** ( 50 ± 15 ) %
**Atmospheric Pressure:** 1015.25 mbar

**Submitted by:** TNP ENVIRONMENT CO.,LTD.
332/173 Moo 3, Bang Rak Phatthana, Bang Bua Thong, Nonthaburi 11110

**Procedure used:** Calibration were conducted using in-house calibration procedure CP-M01 according to comparison method against standard weights on the basis of weighings at an average air density of 1.2 kg/m³ and a temperature of 23.4 °C material density of weight is 8000 kg/m³.

**Condition of this result of calibration**

1.Reference standards instuments :

| Instrument | Model | Serial No. | Certificate No. | Due Date |
|---|---|---|---|---|
| 1) Standard Weight Set (E2) | 73336 | 20026 | MM-0018-22 | 28 Feb 2024 |
| 2) Standard Weight Set (E2) | 73338 | 20028 | MM-0019-22 | 28 Feb 2024 |

2.This certificate is not certified for any commercial transaction.

3.The certificate is valid only to the item calibrated on date and place of calibration.

4.This Certification is traceable to the International System of Unit maintained at:-

-National Institute of Metrology Thailand (NIMT)

**Calibrated by :** [redacted]
**Issue Date :**

[ ] Chaowalit Rittirak

B 0309848

ผ.6/8

THAI CALIBRATION SERVICES CO., LTD.
19/8 Moo 9 Soi Raiking 30 Puttamonton 5 Rd., Sampran, Nakornpatom 73210
Tel. 0-3439-7682-5 Fax: 0-3439-7687
www.thaical.com E-mail : sale@thaicalibration.com, lab@thaicalibration.com

NSC-TISI-TIS 17025 CALIBRATION 0189

# CALIBRATION CERTIFICATE

Certificate No.S2306518S



**The repeatability of indication**

| Nominal Value (g) | Standard Deviation of reading (g) | Maximum difference between successive reading (g) | n |
|---|---|---|---|
| 100 | 0.000005 | 0.00001 | 5 |
| 200 | 0.00005 | 0.0001 | 5 |

**The effect of eccentric application of a load on the indication (test load : 100 g)**

| Position | Balance Reading (g) |
|---|---|
| Point 1 | 100.0000 |
| Point 2 | 100.0002 |
| Point 3 | 100.0001 |
| Point 4 | 100.0000 |
| Point 5 | 100.0001 |
| Eccentric Value | 0.0002 |

**The error of indication**

| Nominal Value (g) | Value of Reference Standard Weight (g) | Balance Reading (g) | Correction (g) | Uncertainty (±) (g) | k |
|---|---|---|---|---|---|
| Unload | 0.00000 | 0.00000 | 0.00000 | 0.000016 | 2.32 |
| 0.1 | 0.10000 | 0.10003 | -0.00003 | 0.000019 | 2.10 |
| 0.5 | 0.50000 | 0.50001 | -0.00001 | 0.000023 | 2.04 |
| 1 | 1.00001 | 1.00000 | +0.00001 | 0.000026 | 2.00 |
| 5 | 5.00000 | 5.00001 | -0.00001 | 0.000038 | 2.00 |
| 10 | 9.99999 | 10.00001 | -0.00002 | 0.000046 | 2.00 |
| 20 | 20.0000 | 20.0000 | 0.0000 | 0.000085 | 2.00 |
| 50 | 50.0000 | 50.0001 | -0.0001 | 0.00011 | 2.00 |
| 100 | 100.0000 | 100.0000 | 0.0000 | 0.00018 | 2.00 |
| 200 | 200.0000 | 200.0004 | -0.0004 | 0.00034 | 2.00 |

Remark : Adjustment, External weight nominal value 100 g, Standard weight of Lab

**Uncertainty of measurement**

The reported expanded uncertainty of measurement is stated as the standard uncertainty of measurement multiplied by the coverage factor (*k*), which for a normal distribution corresponds to a coverage probability of approximately 95% (confidence level).

**This report will certify of the calibrated equipment only.**

--End--



THAI CALIBRATION SERVICES CO., LTD.
19/8 Moo 9 Soi Raiking 30 Puttamonton 5 Rd., Sampran, Nakornpatom 73210
Tel. 0-3439-7682-5 Fax: 0-3439-7687
www.thaical.com E-mail : sale@thaicalibration.com, lab@thaicalibration.com

NSC-TISI-TIS 17025 CALIBRATION 0189

# CALIBRATION CERTIFICATE

Certificate No.S2306518S



**Customer :** TNP ENVIRONMENT CO., LTD.
332/173 Moo 3 Tambon Bang Rak Phatthana,
Amphoe Bang Bua Thong, Nonthaburi 11110

**Equipment :** Non-automatic weighing instrument (Electronic instrument)

| | | | |
|---|---|---|---|
| **Manufacturer :** | Shimadzu | **Order No. :** | 66S2523-1 |
| **Model :** | AP225WD | **Ambient temperature :** | (26.9 ± 5.0) °C |
| **Accuracy class :** | - | **Relative humidity :** | (52.0 ± 10.0) % |
| **Capacity :** | 10 g / 220 g | **Received date :** | 21-Jun-2023 |
| **Resolution :** | 0.00001 g / 0.0001 g | **Date of calibration :** | 21-Jun-2023 |
| **Serial No. :** | D316301848 | **Date of issue :** | 24-Jun-2023 |
| **ID No. :** | TNP.LAB.30 | **Condition of the balance :** | Good working conditions |
| **Place of calibration :** | ห้อง LAB | | |

**Calibration method**

This instrument was calibrated according to the EURAMET Calibration Guide No. 18.

**Condition of reference standard weight**

| Instrument | Nominal value | Serial No. | Certificate No. | Due-date | Density (kg/m³) |
|---|---|---|---|---|---|
| 1 Standard weight set | 1 mg to 2 kg | 15885+15849 | M2210001S | 8-Oct-2023 | 7950 |

**Traceability of the reference standard weight**

This certificate is traceable to SI unit through Mass Calibration Laboratory Thai Calibration Services Co., Ltd., NSC-ONSC accredited no. Calibration 0189.

Calibrated By : [redacted]

**This calibration certificate may not be reproduced other than in full, except with the prior written approval of the head of TCS calibration laboratory.**



น.6/9

THAI CALIBRATION SERVICES CO., LTD.
19/8 Moo 9 Soi Raiking 30 Puttamonton 5 Rd., Sampran, Nakornpatom 73210
Tel. 0-3439-7682-5 Fax: 0-3439-7687
www.thaical.com E-mail : sale@thaicalibration.com, lab@thaicalibration.com

NSC-TISI-TIS 17025 CALIBRATION 0189

# CALIBRATION CERTIFICATE

Certificate No.S2306519S



**The repeatability of indication**

| Nominal Value (g) | Standard Deviation of reading (g) | Maximum difference between successive reading (g) | n |
|---|---|---|---|
| 200 | 0.00000 | 0.0000 | 5 |

**The effect of eccentric application of a load on the indication (test load : 100 g)**

| Position | Balance Reading (g) |
|---|---|
| Point 1 | 100.0000 |
| Point 2 | 100.0000 |
| Point 3 | 100.0000 |
| Point 4 | 99.9998 |
| Point 5 | 99.9998 |
| Eccentric Value | 0.0002 |

**The error of indication**

| Nominal Value (g) | Value of Reference Standard Weight (g) | Balance Reading (g) | Correction (g) | Uncertainty (±) (g) | k |
|---|---|---|---|---|---|
| Unload | 0.0000 | 0.0000 | 0.0000 | 0.000082 | 2.00 |
| 0.1 | 0.1000 | 0.1000 | 0.0000 | 0.000083 | 2.00 |
| 0.5 | 0.5000 | 0.5000 | 0.0000 | 0.000084 | 2.00 |
| 1 | 1.0000 | 0.9999 | +0.0001 | 0.000085 | 2.00 |
| 5 | 5.0000 | 5.0000 | 0.0000 | 0.000090 | 2.00 |
| 10 | 10.0000 | 10.0000 | 0.0000 | 0.000094 | 2.00 |
| 20 | 20.0000 | 20.0001 | -0.0001 | 0.00011 | 2.00 |
| 50 | 50.0000 | 50.0001 | -0.0001 | 0.00013 | 2.00 |
| 100 | 100.0000 | 100.0000 | 0.0000 | 0.00019 | 2.00 |
| 200 | 200.0000 | 199.9998 | +0.0002 | 0.00033 | 2.00 |

Remark : Without adjustment

**Uncertainty of measurement**

The reported expanded uncertainty of measurement is stated as the standard uncertainty of measurement multiplied by the coverage factor (*k*), which for a normal distribution corresponds to a coverage probability of approximately 95% (confidence level).

**This report will certify of the calibrated equipment only.**

--End--



THAI CALIBRATION SERVICES CO., LTD.
19/8 Moo 9 Soi Raiking 30 Puttamonton 5 Rd., Sampran, Nakornpatom 73210
Tel. 0-3439-7682-5 Fax: 0-3439-7687
www.thaical.com E-mail : sale@thaicalibration.com, lab@thaicalibration.com

NSC-TISI-TIS 17025 CALIBRATION 0189

# CALIBRATION CERTIFICATE

Certificate No.S2306519S



**Customer :** TNP ENVIRONMENT CO., LTD.
332/173 Moo 3 Tambon Bang Rak Phatthana,
Amphoe Bang Bua Thong, Nonthaburi 11110

**Equipment :** Non-automatic weighing instrument (Electronic instrument)

| | | | |
|---|---|---|---|
| **Manufacturer :** | Sartorius | **Order No. :** | 66S2523-2 |
| **Model :** | SECURA224-1S | **Ambient temperature :** | (26.8 ± 5.0) °C |
| **Accuracy class :** | - | **Relative humidity :** | (52.0 ± 10.0) % |
| **Capacity :** | 220 g | **Received date :** | 21-Jun-2023 |
| **Resolution :** | 0.0001 g | **Date of calibration :** | 21-Jun-2023 |
| **Serial No. :** | 0041305301 | **Date of issue :** | 24-Jun-2023 |
| **ID No. :** | TNP.LAB.31 | **Condition of the balance :** | Good working conditions |
| **Place of calibration :** | ห้อง LAB | | |

**Calibration method**

This instrument was calibrated according to the EURAMET Calibration Guide No. 18.

**Condition of reference standard weight**

| Instrument | Nominal value | Serial No. | Certificate No. | Due-date | Density (kg/m³) |
|---|---|---|---|---|---|
| 1 Standard weight set | 1 mg to 2 kg | 15885+15849 | M2210001S | 8-Oct-2023 | 7950 |

**Traceability of the reference standard weight**

This certificate is traceable to SI unit through Mass Calibration Laboratory Thai Calibration Services Co., Ltd., NSC-ONSC accredited no. Calibration 0189.

Calibrated By : [redacted]

**This calibration certificate may not be reproduced other than in full, except with the prior written approval of the head of TCS calibration laboratory.**

CAL
Calibratech Co.,Ltd.
7/106-7 Moo 2, Sukhaprachasan 3 Rd., Bangpood, Pakkred, Nonthaburi 11120
Tel.(02) 964-6211 Fax.(02) 964-5155, e-mail : calibratech_cal@yahoo.com, calibratech_cal@hotmail.com

ilac-MRA
NSC-TISI-TIS17025
CALIBRATION 0030

# Certificate of Calibration

**Certificate No. :** **66-400687-1** **Page : 1 of 2**

**Submitted by :** TNP Environment Co., Ltd.
332/173 Moo 3 Bang Rak Phatthana, Bang Bua Thong, Nonthaburi 11110

**Equipment :** Air Chamber (Oven)
Manufacturer : Memmert Model : UF75
Range : N/A °C Resolution : 0.1 °C
Serial No. : B320.0251 ID No. : N/A

**Environment :** On site calibration was carried out at the Laboratory, TNP Environment Co., Ltd.
Ambient Temperature : (27.0 to 28.0) °C
Relative Humidity : (45 to 50) %
Line Voltage : (228.0 to 230.0) V

**Date of Received :** 11 December 2023
**Date of Calibration :** 11 December 2023
**Date of Issue :** 14 December 2023
**Calibrated by :** Permpon Chanpu
**Calibration Method :** CAL-M4004, TLAS G-20
The temperature scale used was based on ITS-90

**Reference Standard Instruments :** This certification is traceable to the International System of Units
Standard Digital Thermometer with Thermocouple probe

| ID No. | Cert. No. | Due Date | Traceability |
|---|---|---|---|
| 400046 & 400023 | 66-400547-1 | 04 Apr 2024 | National Institute of Metrology Thailand (NIMT) |

Appr[redacted]

The Uncertainties are for a confidence probability of approximately 95%

This cerificate may not be reproduced other than in full except with the prior written approval of the Calibratech Co.,Ltd.



HARIKUL SCIENCE
Harikul Science Co.,Ltd.
694 Soi Ratchadanivet 24, Pracharatbamphen,
Samsaennok, Huaikhwang, Bangkok 10310
Tel: 0-2274-2456 Fax: 0-2274-2443
Email: info@harikul.com www.harikul.com

CERT.No.: HS-U039F

Certificate of Calibration

Calibration Date : 20 Jun 23
Submitted by : TNP ENVIRONMENT COMPANY LIMITED.
332/173 Moo. 3, Tambon Bang Rak Phatthana,
Amphoe Bang Bua Thong, Nonthaburi 11110

Avg Room Temp : 20 °C
Avg Water Temp : 20 °C
Air Pressure : 757.00 mmHg
Salinity : 0 ppt

Model : YSI 4010-2W
S/N : 22051520
Probe : YSI 4100
S/N : 22C102711
ID NO. : -
Air Temp ref : S/N. E00522
Barometric ref : S/N. E00522
Water Temp ref : S/N. 11431

Technician : Kittipong M.

Calibration Details

| Calibration Point | 100% air sat. (@20 °C, DO = 9.09 mg/l) | (status) | | (status) |
|---|---|---|---|---|
| Measurement 1 (mg/l) | 9.05 | (PASS) | - | - |
| Measurement 2 (mg/l) | 9.05 | (PASS) | - | - |
| Measurement 3 (mg/l) | 9.04 | (PASS) | - | - |
| Measurement 4 (mg/l) | 9.03 | (PASS) | - | - |
| Measurement 5 (mg/l) | 9.04 | (PASS) | - | - |
| Measurement 6 (mg/l) | 9.04 | (PASS) | - | - |
| Measurement 7 (mg/l) | 9.04 | (PASS) | - | - |
| Measurement 8 (mg/l) | 9.03 | (PASS) | - | - |
| Measurement 9 (mg/l) | 9.03 | (PASS) | | - |
| Measurement 10 (mg/l) | 9.03 | (PASS) | - | - |
| Mean Measurement | 9.04 | mg/l | - | - |
| Inaccuracy | 0.05 | mg/l | - | - |
| Overall Status | (PASS) | | | |

*Manufacturer Specification*
Accuracy = +/- 0.2 mg/l

1) This certificate is issued based on the result that are found as shown on date and place of test only.
2) The calibration procedure followed in accordance with Harikul Science Co., Ltd.
3) This result shall not be used for advertising purpose.

[redacted]

[redacted]

# METROLOGY SYSTEM ( THAILAND ) CO.,LTD.

ID LINE : IEC17025

# Certificate of Calibration



Certificate Number : SPR23110535-2

Customer : TNP ENVIRONMENT CO.,LTD.
332/173 Moo.3, Bang Rak Phatthana, Bang Bua Thong, Nonthaburi 11110

| | | | |
|---|---|---|---|
| Equipment Name | : Water Quality Meter | | |
| Manufacturer | : Digicon | | |
| Model | : WA-48SD | | |
| Serial Number | : T.075714 | | |
| ID. Number | : TNP-LAB-46 | | |
| Environmental Conditions | | | |
| Ambient Temperature | : 23 °C ± 2 °C | Received Date | : 30 Nov 2023 |
| Relative Humidity | : 50 % ± 15 % | Calibration Date | : 19 Jan 2024 |
| Location of Calibration | : In-Lab | Recommend Due Date | : 19 Jan 2025 |
| Calibration Procedure | : SP-CPC-04-01, SP-CPC-04-02, | Date of Issue | : 20 Jan 2024 |
| Method of Calibration | SP-CPC-04-11 | | |

This certifies that the above instrument was calibrated in compliance with the calibration system requirement of ISO/IEC 17025:2017 in accordance with reference procedure. Standards used to perform this calibration are certified by to NIST or equivalent, National metrology institute, Natural physical constants, consensus standards. The result reported herein apply only to the calibration of the item described above as received.Our decision rule is to contact the customer if the item pass and fail calibration when the results include the uncertainties and the customer must determine if the results meets their needs.

The calibration certificate shall not be reproduced except in full,without written approval of SP Metrology System (T[redacted]

Calibrated[redacted]



69/29 Moo 1 Klongsi Klongluang Pathumthani 12120 ( Thailand ) Tel: (662) 193-2220 5 คูลาย www.สอบเทียบเครื่องมือวัด.com



# CAL

Calibratech Co.,Ltd.
7/106-7 Moo 2, Sukhaprachasan 3 Rd., Bangpood, Pakkred, Nonthaburi 11120
Tel.(02) 964-6211 Fax.(02) 964-5155, e-mail : calibratech_cal@yahoo.com, calibratech_cal@hotmail.com

## Certificate of Calibration

**Certificate No. : 66-400687-1**



**Result of Calibration :** Without Adjustment

**UUC Condition As-Received :** Good

**Function :** Temperature measurement

This instrument was setting air ventilation at position 0 (close)

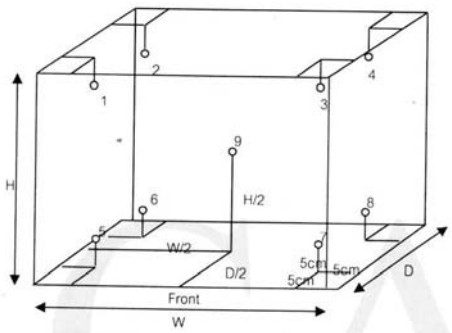


Inside of Chamber
W = 0.40 m
D = 0.33 m
H = 0.56 m
Capacity = 0.07 $m^3$

| Test Point (°C) | Setting Temperature (°C) | Indicating Temperature (°C) | Measured Temperature (°C) @ Sensor No. 1 | 2 | 3 | 4 | 5 | 6 | 7 | 8 | 9 | Uncertainty (± °C) |
|---|---|---|---|---|---|---|---|---|---|---|---|---|
| 85.0 | 85.0 | 85.0 | 85.3 | 85.1 | 85.2 | 85.1 | 85.0 | 84.8 | 84.7 | 84.7 | 85.0 | 0.64 |
| 104.0 | 104.0 | 104.0 | 104.3 | 104.2 | 104.3 | 104.1 | 104.0 | 103.8 | 103.7 | 103.7 | 104.0 | 0.69 |
| 180.0 | 180.0 | 180.0 | 179.5 | 179.9 | 180.0 | 179.8 | 179.9 | 179.4 | 178.9 | 179.4 | 180.0 | 0.95 |

| Test Point (°C) | Setting Temperature (°C) | Indicating Temperature (°C) | Measured Uniformity (°C) | Measured Stability (°C) | Overall Variation (°C) |
|---|---|---|---|---|---|
| 85.0 | 85.0 | 85.0 | 0.4 | 0.1 | 0.8 |
| 104.0 | 104.0 | 104.0 | 0.4 | 0.1 | 0.8 |
| 180.0 | 180.0 | 180.0 | 1.4 | 0.3 | 1.6 |

Remark The uncertainty is not combine uniformity of the air chamber

This result of calibration was found accurate as shown on date and place of calibration only.

This reported uncertainty of measurement was based on a standard uncertainty multiplied by a coverage factor k = 2 , providing a level of confidence of approximately 95%

- o0o -

[redacted]

ID LINE : IEC17025

# Result of Calibration

Certificate No. : SPR23110535-2



pH Measurement @ 25 °C

Unit : pH

| Standard Solution | UUC Reading | Error | Uncertainty ( ± ) |
|---|---|---|---|
| 4.008 | 3.98 | -0.028 | 0.014 |
| 6.984 | 7.01 | 0.026 | 0.012 |
| 10.011 | 10.02 | 0.009 | 0.018 |

Conductivity Measurement @ 25 °C

| Standard Solution | UUC Reading | Error | Uncertainty ( ± ) |
|---|---|---|---|
| 84 µS/cm | 84.6 µS/cm | 0.6 µS/cm | 0.60 µS/cm |
| 1.413 mS/cm | 1.415 mS/cm | 0.002 mS/cm | 0.0082 mS/cm |
| 12.88 mS/cm | 12.89 mS/cm | 0.01 mS/cm | 0.075 mS/cm |

* Dissolved Oxygen Permanance Test

Unit : mg/L

| Actual Standard | UUC Reading | Error | Uncertainty ( ± ) |
|---|---|---|---|
| 0.0 | 0.0 | 0.0 | 0.13 |
| 5.0 | 4.9 | -0.1 | 0.13 |
| 8.3 | 8.2 | -0.1 | 0.13 |

Salinity Measurement

Unit : % Salinity

| Actual Standard | UUC Reading | Error | Uncertainty ( ± ) |
|---|---|---|---|
| 5.0269 | 5.04 | 0.0131 | 0.015 |

**Note:**

The result of calibration was found accurate as show on date and place of calibration only.
This Certificate is not certified for any commercial transaction.
Calibration Marked (*) "Not ANAB Accredited " in this Certificate have been included for completeness.

**Measurement Uncertainty**

The reported uncertainty of measurement is the expanded uncertainty obtained by multiplying the standard uncertainty with the coverage factor k = 2, providing a level of confidence approximately 95%.

- End of Certificate -



69/29 Moo 1 Klongsi Klongluang Pathumthani 12120 ( Thailand ) Tel: (662) 193-2220 5 ผู้สาย www.สอบเทียบเครื่องมือวัด.com

METROLOGY SYSTEM ( THAILAND ) CO.,LTD.

ID LINE : IEC17025

# Calibration Report

Certificate Number : SPR23110535-2



## Reference Standards

| Equipment Name | Model | Serial No. | Certificate No. | Due. Date |
|---|---|---|---|---|
| Zero Oxygen Solution | HI7040L | Lot S0027-23 _ | 21C31 | 21 Mar 2028 |
| Standard pH Solution | PH016.L5 | Lot No.882984 | 61267077 | 20 Mar 2024 |
| Standard pH Solution | PH107.L5 | Lot No.882985 | 61275614 | 13 Apr 2024 |
| Standard pH Solution | PH020.L5 | Lot No.882986 | 61268050 | 20 Mar 2024 |
| Conductivity Standard 84 uS/cm | CS84M0S.L5 | Lot No.882987 | 61247444 | 20 Mar 2024 |
| Conductivity Standard 1413 uS/cm | CS1413M0S.L5 | Lot No.882988 | 61267992 | 20 Mar 2024 |
| Conductivity Standard 12880 uS/cm | CS1288P1S.L5 | Lot No.882989 | 61247253 | 20 Mar 2024 |
| Sodium Chloride Standard Solution | RM003461L25 | Lot No.841770 | 97756699 | 23 Sep 2024 |

**Traceability**

This certification is traceable to the International System of Unit maintained at :
HANNA - Hanna Instruments (Thailand) Ltd.
C.P.A. Chem - ANAB#AT-1836 (ISO/IEC 17025:2017) and ANAB#AR-1835 (ISO/IEC 17034:2016)



69/29 Moo 1 Klongsi Klongluang Pathumthani 12120 ( Thailand ) Tel: (662) 193-2220 5 ผู้สาย www.สอบเทียบเครื่องมือวัด.com

**Condition of calibration result**

1. Reference Standard Material :

| Material | Serial No. | Certificate No. | Due date |
|---|---|---|---|
| 1. Absorbance Standard set | 39130 | 106269 | 10 Oct 2024 |
| 2. Wavelength Standard set | 36730 | 98330 | 19 Jan 2024 |
| 3. Wavelength Standard set | 36730 | 98331 | 19 Jan 2024 |

2. This certificate is valid only to the item calibrated on date and place of calibration.
3. This certificate is traceable to the International System of Unit maintained through :
   - Starna Scientific Ltd.

4. Spectral BandWidth : 4 nm
   Scan Speed : - nm/min

**Calibration Results : without adjustment**

**Wavelength Accuracy**

| Certified Values of Reference Material ( nm ) | UUC Reading ( nm ) | Uncertainty of Measurement ( ± nm ) | Coverage Factor *k* |
|---|---|---|---|
| 418.48 | 418.5 | 0.15 | 2.00 |
| 513.70 | 513.1 | 0.14 | 2.00 |
| 536.90 | 536.3 | 0.14 | 2.00 |
| 637.94 | 637.6 | 0.14 | 2.00 |
| 879.70 | 878.8 | 0.15 | 2.00 |

[redacted]



TECHNOLOGY PROMOTION ASSOCIATION (THAILAND-JAPAN)
CORPORATE SERVICES 3: EQUIPMENT CALIBRATION AND TESTING SERVICES
534/4 PATTANAKARN ROAD SOI 18, SUANLUANG, SUANLUANG BANGKOK 10250
TEL. 0-2717-3000-29 FAX. 0-2719-9484

NSC-TISI-TIS17025 CALIBRATION 0008



# Certificate of Calibration

| | |
|---|---|
| **Equipment :** | Spectrophotometer |
| **Manufacturer :** | Merck |
| **Model :** | Prove 100 |
| **Serial No. :** | 1904113676 |
| **ID No. :** | S2019025 |
| **Condition As-Received:** | Used Item |
| **Received Date :** | 21 September 2023 |
| **Calibration Date :** | 21 September 2023 |
| **Reference :** | 2309-0483OC-2 |
| **Submitted by :** | SGS (Thailand) Limited<br>1/209, 1/211 Moo 1, Ban Chang,<br>Ban Chang, Rayong 21130 |
| **Calibration Place :** | Spectrophotometry Lab |
| **Ambient Temperature :** | ( 23.8 - 20.9 ) °C (On-Site) |
| **Relative Humidity :** | ( 50.1 - 50.2 ) % (On-Site) |
| **Calibration Procedure :** | In - house method :<br>CP-OCH4 based on ASTM E 275-01 |

**Calibrated by :** [redacted]

**Approved by :**

(✓) Saithip Meangmai
( ) Warakorn Lerngagtrakul
( ) Ponpan Paipim

**Issue Date :** 26 September 2023

**The Uncertainties are for a confidence probability of approximately 95%**

This certificate may not be reproduced other than in full, except with the prior written
Approval of the head of Corporate Services 3 : Equipment Calibration and Testing Services.

# Verification COD Reactor

| | | | |
|---|---|---|---|
| Equipment Name | Dri-Block Heater-Digital | Temperature Ver | 150±2 °C |
| Serial No. | 000827-A | Model | DB 200/3 |
| Reference Standard | Thermocouple Type K | Certificate No. | 21/4272 |
| Calibration Date | 10/03/2023 | Next Cal. Date | 10/03/2024 |

**Left**

| Hole 1 | | | | Hole 2 | | | | Hole 3 | | | |
|---|---|---|---|---|---|---|---|---|---|---|---|
| NO. | Result | | | NO. | Result | | | NO. | Result | | |
| | temp. °C | Corr. | temp+Corr. | | temp. °C | Corr. | temp+Corr. | | temp. °C | Corr. | temp+Corr. |
| 1 | 151.1 | -0.36 | 150.7 | 1 | 150.6 | -0.36 | 150.2 | 1 | 151.4 | -0.36 | 151.0 |
| 2 | 150.8 | -0.36 | 150.4 | 2 | 151.7 | -0.36 | 151.3 | 2 | 151.3 | -0.36 | 150.9 |
| 3 | 151.2 | -0.36 | 150.8 | 3 | 151.1 | -0.36 | 150.7 | 3 | 151.7 | -0.36 | 151.3 |
| | | Mean | 150.67 | | | Mean | 150.77 | | | Mean | 151.11 |
| | | SD | 0.208 | | | SD | 0.551 | | | SD | 0.208 |
| | | %RSD | 0.138 | | | %RSD | 0.365 | | | %RSD | 0.138 |

| Hole 4 | | | | Hole 5 | | | | Hole 6 | | | |
|---|---|---|---|---|---|---|---|---|---|---|---|
| NO. | Result | | | NO. | Result | | | NO. | Result | | |
| | temp. °C | Corr. | temp+Corr. | | temp. °C | Corr. | temp+Corr. | | temp. °C | Corr. | temp+Corr. |
| 1 | 151.7 | -0.36 | 151.3 | 1 | 150.5 | -0.36 | 150.1 | 1 | 151.5 | -0.36 | 151.1 |
| 2 | 151.6 | -0.36 | 151.2 | 2 | 151.3 | -0.36 | 150.9 | 2 | 151.4 | -0.36 | 151.0 |
| 3 | 151.5 | -0.36 | 151.1 | 3 | 150.6 | -0.36 | 150.2 | 3 | 150.5 | -0.36 | 150.1 |
| | | Mean | 151.24 | | | Mean | 150.44 | | | Mean | 150.77 |
| | | SD | 0.100 | | | SD | 0.436 | | | SD | 0.551 |
| | | %RSD | 0.066 | | | %RSD | 0.290 | | | %RSD | 0.365 |

| Hole 7 | | | | Hole 8 | | | | Hole 9 | | | |
|---|---|---|---|---|---|---|---|---|---|---|---|
| NO. | Result | | | NO. | Result | | | NO. | Result | | |
| | temp. °C | Corr. | temp+Corr. | | temp. °C | Corr. | temp+Corr. | | temp. °C | Corr. | temp+Corr. |
| 1 | 151.3 | -0.36 | 150.9 | 1 | 151.7 | -0.36 | 151.3 | 1 | 150.5 | -0.36 | 150.1 |
| 2 | 151.0 | -0.36 | 150.6 | 2 | 150.5 | -0.36 | 150.1 | 2 | 151.2 | -0.36 | 150.8 |
| 3 | 151.3 | -0.36 | 150.9 | 3 | 151.4 | -0.36 | 151.0 | 3 | 150.8 | -0.36 | 150.4 |
| | | Mean | 150.84 | | | Mean | 150.84 | | | Mean | 150.47 |
| | | SD | 0.173 | | | SD | 0.624 | | | SD | 0.351 |
| | | %RSD | 0.115 | | | %RSD | 0.414 | | | %RSD | 0.233 |

| Hole 10 | | | | Hole 11 | | | | Hole 12 | | | |
|---|---|---|---|---|---|---|---|---|---|---|---|
| NO. | Result | | | NO. | Result | | | NO. | Result | | |
| | temp. °C | Corr. | temp+Corr. | | temp. °C | Corr. | temp+Corr. | | temp. °C | Corr. | temp+Corr. |
| 1 | 151.6 | -0.36 | 151.2 | 1 | 151.5 | -0.36 | 151.1 | 1 | 150.7 | -0.36 | 150.3 |
| 2 | 151.6 | -0.36 | 151.2 | 2 | 151.2 | -0.36 | 150.8 | 2 | 151.6 | -0.36 | 151.2 |
| 3 | 150.8 | -0.36 | 150.4 | 3 | 151.5 | -0.36 | 151.1 | 3 | 151.2 | -0.36 | 150.8 |
| | | Mean | 150.97 | | | Mean | 151.04 | | | Mean | 150.81 |
| | | SD | 0.462 | | | SD | 0.173 | | | SD | 0.451 |
| | | %RSD | 0.306 | | | %RSD | 0.115 | | | %RSD | 0.299 |

Verified By [redacted]

**Confidential - [redacted]**

SGS Form No. ENGL 11600, Rev 3.0, Date 15/03/2016

14/6/15

Cert. No. : 23CHO565



**Calibration Results : without adjustment**

**Photometric Accuracy**

| Wavelength (nm) | Certified Values of Reference Material ( Abs ) | UUC Reading ( Abs ) | Uncertainty of Measurement ( ±Abs ) | Coverage Factor *k* |
|---|---|---|---|---|
| 440.0 | Zero | 0.000 | 0.0028 | 2.00 |
| | 0.5645 | 0.563 | 0.0028 | 2.00 |
| | 0.6988 | 0.698 | 0.0028 | 2.00 |
| | 1.0017 | 1.001 | 0.0028 | 2.00 |
| 546.1 | Zero | 0.000 | 0.0028 | 2.00 |
| | 0.5281 | 0.527 | 0.0028 | 2.00 |
| | 0.6962 | 0.696 | 0.0028 | 2.00 |
| | 0.9984 | 0.998 | 0.0028 | 2.00 |
| 635.0 | Zero | 0.000 | 0.0028 | 2.00 |
| | 0.5699 | 0.569 | 0.0028 | 2.00 |
| | 0.7606 | 0.760 | 0.0028 | 2.00 |
| | 1.0927 | 1.092 | 0.0028 | 2.00 |

**Remark**

- Each individual filter is measured against the empty filter holder (blank) used to zero the spectrophotometer

The reported uncertainty of measurement was based on a standard uncertainty multiplied by a coverage factor *k* , providing a level of confidence of approximately 95 %.

-o0o-

[redacted]

a 1182164

# Verification COD Reactor

| | | | |
|---|---|---|---|
| Equipment Name | Dri-Block Heater Digital | Temperature Ver | 150±2 °C |
| Serial No. | 000827/A | Model | DB 200/3 |
| Reference Standard | Thermocouple Type K | Certificate No. | 21/4272 |
| Calibration Date | 10/03/2023 | Next Cal. Date | 10/03/2024 |

**Right**

| Hole 1 | | | | Hole 2 | | | | Hole 3 | | | |
|---|---|---|---|---|---|---|---|---|---|---|---|
| NO. | Result | | | NO. | Result | | | NO. | Result | | |
| | temp. °C | Corr. | temp+Corr. | | temp. °C | Corr. | temp+Corr. | | temp. °C | Corr. | temp+Corr. |
| 1 | 149.9 | -0.36 | 149.5 | 1 | 150.3 | -0.36 | 149.9 | 1 | 151.0 | -0.36 | 150.6 |
| 2 | 151.1 | -0.36 | 150.7 | 2 | 151.0 | -0.36 | 150.6 | 2 | 151.0 | -0.36 | 150.6 |
| 3 | 150.9 | -0.36 | 150.5 | 3 | 149.9 | -0.36 | 149.5 | 3 | 150.4 | -0.36 | 150.0 |
| | | Mean | 150.27 | | | Mean | 150.04 | | | Mean | 150.44 |
| | | SD | 0.643 | | | SD | 0.557 | | | SD | 0.346 |
| | | %RSD | 0.428 | | | %RSD | 0.371 | | | %RSD | 0.230 |

| Hole 4 | | | | Hole 5 | | | | Hole 6 | | | |
|---|---|---|---|---|---|---|---|---|---|---|---|
| NO. | Result | | | NO. | Result | | | NO. | Result | | |
| | temp. °C | Corr. | temp+Corr. | | temp. °C | Corr. | temp+Corr. | | temp. °C | Corr. | temp+Corr. |
| 1 | 150.8 | -0.36 | 150.4 | 1 | 150.0 | -0.36 | 149.6 | 1 | 150.5 | -0.36 | 150.1 |
| 2 | 151.0 | -0.36 | 150.6 | 2 | 150.0 | -0.36 | 149.6 | 2 | 150.8 | -0.36 | 150.4 |
| 3 | 150.9 | -0.36 | 150.5 | 3 | 150.7 | -0.36 | 150.3 | 3 | 149.8 | -0.36 | 149.4 |
| | | Mean | 150.54 | | | Mean | 149.87 | | | Mean | 150.01 |
| | | SD | 0.100 | | | SD | 0.404 | | | SD | 0.513 |
| | | %RSD | 0.066 | | | %RSD | 0.270 | | | %RSD | 0.342 |

| Hole 7 | | | | Hole 8 | | | | Hole 9 | | | |
|---|---|---|---|---|---|---|---|---|---|---|---|
| NO. | Result | | | NO. | Result | | | NO. | Result | | |
| | temp. °C | Corr. | temp+Corr. | | temp. °C | Corr. | temp+Corr. | | temp. °C | Corr. | temp+Corr. |
| 1 | 150.8 | -0.36 | 150.4 | 1 | 151.1 | -0.36 | 150.7 | 1 | 150.2 | -0.36 | 149.8 |
| 2 | 150.9 | -0.36 | 150.5 | 2 | 150.7 | -0.36 | 150.3 | 2 | 150.2 | -0.36 | 149.8 |
| 3 | 151.0 | -0.36 | 150.6 | 3 | 151.1 | -0.36 | 150.7 | 3 | 149.9 | -0.36 | 149.5 |
| | | Mean | 150.54 | | | Mean | 150.61 | | | Mean | 149.74 |
| | | SD | 0.100 | | | SD | 0.231 | | | SD | 0.173 |
| | | %RSD | 0.066 | | | %RSD | 0.153 | | | %RSD | 0.116 |

| Hole 10 | | | | Hole 11 | | | | Hole 12 | | | |
|---|---|---|---|---|---|---|---|---|---|---|---|
| NO. | Result | | | NO. | Result | | | NO. | Result | | |
| | temp. °C | Corr. | temp+Corr. | | temp. °C | Corr. | temp+Corr. | | temp. °C | Corr. | temp+Corr. |
| 1 | 150.6 | -0.36 | 150.2 | 1 | 150.5 | -0.36 | 150.1 | 1 | 150.9 | -0.36 | 150.5 |
| 2 | 150.5 | -0.36 | 150.1 | 2 | 150.9 | -0.36 | 150.5 | 2 | 150.0 | -0.36 | 149.6 |
| 3 | 149.9 | -0.36 | 149.5 | 3 | 151.1 | -0.36 | 150.7 | 3 | 150.5 | -0.36 | 150.1 |
| | | Mean | 149.97 | | | Mean | 150.47 | | | Mean | 150.11 |
| | | SD | 0.379 | | | SD | 0.306 | | | SD | 0.451 |
| | | %RSD | 0.252 | | | %RSD | 0.203 | | | %RSD | 0.300 |

Verified By [redacted]

**Confidential - N**[redacted]

SGS Form No. ENGL 11600, Rev 3.0, Date 15/03/2016

# Verification COD Reactor

| | | | |
|---|---|---|---|
| Equipment Name | Dri-Block Heater Digital | Temperature Ver | 150±2 °C |
| Serial No. | 000827-A | Model | DB 200/3 |
| Reference Standard | Thermocouple Type K | Certificate No. | 21/4272 |
| Calibration Date | 10/03/2023 | Next Cal. Date | 10/03/2024 |

**Middle**

| Hole 1 | | | | Hole 2 | | | | Hole 3 | | | |
|---|---|---|---|---|---|---|---|---|---|---|---|
| NO. | Result | | | NO. | Result | | | NO. | Result | | |
| | temp. °C | Corr. | temp+Corr. | | temp. °C | Corr. | temp+Corr. | | temp. °C | Corr. | temp+Corr. |
| 1 | 151.2 | -0.36 | 150.8 | 1 | 150.7 | -0.36 | 150.3 | 1 | 151.1 | -0.36 | 150.7 |
| 2 | 151.5 | -0.36 | 151.1 | 2 | 151.7 | -0.36 | 151.3 | 2 | 151.6 | -0.36 | 151.2 |
| 3 | 151.6 | -0.36 | 151.2 | 3 | 150.8 | -0.36 | 150.4 | 3 | 150.9 | -0.36 | 150.5 |
| | | Mean | 151.07 | | | Mean | 150.71 | | | Mean | 150.84 |
| | | SD | 0.208 | | | SD | 0.551 | | | SD | 0.361 |
| | | %RSD | 0.138 | | | %RSD | 0.365 | | | %RSD | 0.239 |

| Hole 4 | | | | Hole 5 | | | | Hole 6 | | | |
|---|---|---|---|---|---|---|---|---|---|---|---|
| NO. | Result | | | NO. | Result | | | NO. | Result | | |
| | temp. °C | Corr. | temp+Corr. | | temp. °C | Corr. | temp+Corr. | | temp. °C | Corr. | temp+Corr. |
| 1 | 151.5 | -0.36 | 151.1 | 1 | 151.6 | -0.36 | 151.2 | 1 | 150.5 | -0.36 | 150.1 |
| 2 | 150.7 | -0.36 | 150.3 | 2 | 151.2 | -0.36 | 150.8 | 2 | 150.6 | -0.36 | 150.2 |
| 3 | 151.6 | -0.36 | 151.2 | 3 | 151.2 | -0.36 | 150.8 | 3 | 151.2 | -0.36 | 150.8 |
| | | Mean | 150.91 | | | Mean | 150.97 | | | Mean | 150.41 |
| | | SD | 0.493 | | | SD | 0.231 | | | SD | 0.379 |
| | | %RSD | 0.327 | | | %RSD | 0.153 | | | %RSD | 0.252 |

| Hole 7 | | | | Hole 8 | | | | Hole 9 | | | |
|---|---|---|---|---|---|---|---|---|---|---|---|
| NO. | Result | | | NO. | Result | | | NO. | Result | | |
| | temp. °C | Corr. | temp+Corr. | | temp. °C | Corr. | temp+Corr. | | temp. °C | Corr. | temp+Corr. |
| 1 | 151.5 | -0.36 | 151.1 | 1 | 151.5 | -0.36 | 151.1 | 1 | 151.2 | -0.36 | 150.8 |
| 2 | 150.5 | -0.36 | 150.1 | 2 | 151.7 | -0.36 | 151.3 | 2 | 150.9 | -0.36 | 150.5 |
| 3 | 150.8 | -0.36 | 150.4 | 3 | 151.1 | -0.36 | 150.7 | 3 | 151.4 | -0.36 | 151.0 |
| | | Mean | 150.57 | | | Mean | 151.07 | | | Mean | 150.81 |
| | | SD | 0.513 | | | SD | 0.306 | | | SD | 0.252 |
| | | %RSD | 0.341 | | | %RSD | 0.202 | | | %RSD | 0.167 |

| Hole 10 | | | | Hole 11 | | | | Hole 12 | | | |
|---|---|---|---|---|---|---|---|---|---|---|---|
| NO. | Result | | | NO. | Result | | | NO. | Result | | |
| | temp. °C | Corr. | temp+Corr. | | temp. °C | Corr. | temp+Corr. | | temp. °C | Corr. | temp+Corr. |
| 1 | 151 | -0.36 | 150.6 | 1 | 151.5 | -0.36 | 151.1 | 1 | 151.2 | -0.36 | 150.8 |
| 2 | 150.6 | -0.36 | 150.2 | 2 | 150.6 | -0.36 | 150.2 | 2 | 150.5 | -0.36 | 150.1 |
| 3 | 151.5 | -0.36 | 151.1 | 3 | 151.0 | -0.36 | 150.6 | 3 | 151.1 | -0.36 | 150.7 |
| | | Mean | 150.67 | | | Mean | 150.67 | | | Mean | 150.57 |
| | | SD | 0.451 | | | SD | 0.451 | | | SD | 0.379 |
| | | %RSD | 0.299 | | | %RSD | 0.299 | | | %RSD | 0.251 |

Verified By [redacted]

**Confidential**[redacted]

SGS Form No. ENGL 11600, Rev 3.0, Date 15/03/2016

ARCHEMICA

# Certificate of Calibration

**Aquion RFIC : Anion System (ID#1054)**

**This certificate is to verify that instrument below are calibrated by**

**Archemica Lab Co.,Ltd.**

| | |
|---|---|
| Aquion | S/N 220380025 |
| AS-DV | S/N 2203880170 |

**For**

## SGS (Thailand) Limited (Rayong Branch).

Operator Signatur[redacted]te: 15 / Nov / 2023

น.6/17

สรุปผลการ Verify

ปรับอุณหภูมิที่ 154.0 °C แต่ละคอลัมจะมีอุณหภูมิ 150 ± 2 °C ทุกคอลัม

Verified By [redacted]

Confidential - [redacted]

SGS Form No. ENGL 11600, Rev 3.0, Date 15/03/2016

PerkinElmer

## MAINTENANCE AND TEST CERTIFICATE MODEL

### Avio220 Max

**SERIAL NUMBER** M79S2304111 **DATE TESTED** January 10, 2024

| | |
|---|---|
| **1. MECHANICAL CHECKS** | |
| A. Inspect and clean all fans and filters. | OK |
| B. Inspect and replace as necessary, all torch components including the RF coil. | OK |
| C. Inspect all tubing for sign of clacking or leaking. | OK |
| D. Adjust water and gas pressure regulator settings. | OK |
| E. Inspect and leak check pneumatics drawers. | OK |
| F. Clean the exterior of the instrument. | OK |
| **2. OPTICAL CHECKS** | |
| A. Inspect and clean all optical components. | OK |
| B. As reqiured, check and replace all purgebfilters. | OK |
| C. Recheck optical alignment. | OK |
| **3. COOLING SYSTEM CHECKS** | |
| A. Perform preventive maintenance on chiller. | OK |
| B. Flush out the chiller every year. | OK |
| **4. PERFORMANCE CHECKS** | |
| A. Torch View Alignment. | OK |
| B. Wavelength Calibration. | OK |



PerkinElmer Scientific (Thailand) Co., Ltd.
290 Soi Soonvijai 4, Bangkapi, Huay Kwang, Bangkok 10310 Head Office

WO-02557040/2024

PerkinElmer

## MAINTENANCE AND TEST CERTIFICATE MODEL

### Avio220 Max

| | | | |
|---|---|---|---|
| **Customer :** | SGS(Thailand)Limited | **Date Tested:** | January 10, 2024 |
| | Rayong Branch | **Recommendation Recertification** | |
| **Address :** | 1/209 , 1/211 Moo 1, | **Period** | 6 Months |
| | T. Banchang, A. Banchang | **Recertification Due:** | July 10, 2024 |
| | Rayong 21130 | **Date Last Certified:** | N/A |
| **User Name** | Khun Saijai Ruangsawat | **Visit Number:** | 1OF2 W |
| **Phone:** | +66(0)38685260-64 | **PerkinElmer Phone:** | 02-719-6420 ext 206 |
| **Email:** | saijai.ruangsawat@sgs.com | **PerkinElmer Fax:** | 02-318-5597 |

**CONFIGURATION TESTED**

| MODEL | SERIAL NUMBER | SOFTWARE |
|---|---|---|
| AVIO200 MAX | M79S2304111 | Syngristix V5 |

| TESTED EQUIPMENT | CALIBRATION NUMBER | EXPIRATION |
|---|---|---|
| IPV Methods | | |

| TEST STANDARD USED | PART NUMBER | EXPIRATION DATE |
|---|---|---|
| Multielement Standard | N069-1579 | 30-Dec-24 |
| Instrument Cal. STD4 | N930-0221 | 30-Nov-24 |

| CUSTOMER SUPPLIED | COMMENTS | CUSTOMER INITIALS |
|---|---|---|
| 2 % HNO3 | | |
| 10 % HNO3 | | |



PerkinElmer Scientific (Thailand) Co., Ltd.
290 Soi Soonvijai 4, Bangkapi, Huay Kwang, Bangkok 10310 Head Office

PerkinElmer

## MAINTENANCE AND TEST CERTIFICATE MODEL

### Avio220 Max

**SERIAL NUMBER** M79S2304111 **DATE TESTED** January 10, 2024

**Remarks :**

Commissioning follow as commissioning performance sheets.

This is to certify that the above tests have been perfomed and the configuration tested

☑ meets

☐ does not meet

the PerkinElmer Specifications listed on this certificate.

This certificate does not modify PerkinElmer's standard terms and condition of sale, including warranty terms.

**Service Department PerkinElmer Ltd.**

Customer Service Engineer: วิพัฒธ์ พรหมลัมดา

( Wiphan Promlumda )

Service Engineer



PerkinElmer Scientific (Thailand) Co., Ltd.
290 Soi Soonvijai 4, Bangkapi, Huay Kwang, Bangkok 10310 Head Office

WO-02557040/2024

PerkinElmer

## MAINTENANCE AND TEST CERTIFICATE MODEL

### Avio220 Max

**SERIAL NUMBER** M79S2304111 **DATE TESTED** January 10, 2024

| PARAMETER | | SPECIFICATION | | FINAL VALUE | |
|---|---|---|---|---|---|
| **Spectral Resolution : UV** | | | | | |
| As 193.696 nm | | ≤ 0.009 | nm | 0.00864 | nm |
| Ni 231.604 nm | | ≤ 0.011 | nm | 0.01009 | nm |
| Ni 341.476 nm | | ≤ 0.015 | nm | 0.01169 | nm |
| **Spectral Resolution : VIS** | | | | | |
| Ba 455.403 nm | | ≤ 0.020 | nm | 0.01776 | nm |
| **Precision** | | | | | |
| Zn 206.200 nm | % RSD | ≤ 1.0 % | | 0.28 | % |
| Mg 280.271 nm | % RSD | ≤ 1.0 % | | 0.73 | % |
| Mg 285.213 nm | % RSD | ≤ 1.0 % | | 0.61 | % |
| Ba 455.403 nm | % RSD | ≤ 1.0 % | | 0.54 | % |
| **Detection Limits : Axial** | | | | | |
| Tl 190.801 nm | 3(sd) | | | 1.52 | ppb |
| As 193.696 nm | 3(sd) | | | 1.4 | ppb |
| Se 196.026 nm | 3(sd) | | | 1.53 | ppb |
| Pb 220.353 nm | 3(sd) | | | 1.72 | ppb |
| **Detection Limits : Radial** | | | | | |
| As 193.696 nm | 3(sd) | | | 1.69 | ppb |
| Zn 213.857 nm | 3(sd) | | | 0.42 | ppb |
| Mn 257.610 nm | 3(sd) | | | 0.1 | ppb |
| La 379.478 nm | 3(sd) | | | 0.61 | ppb |
| Ba 455.403 nm | 3(sd) | | | 0.13 | ppb |
| Ba 493.408 nm | 3(sd) | | | 0.1 | ppb |
| **BEC : Axial** (IB X 1000)/(IS-IB) | | | | | |
| Mn 257.610 nm | | ≤ 30 ppb | | 7.83 | ppb |
| **BEC : Radial** (IB X 1000)/(IS-IB) | | | | | |
| Mn 257.610 nm | | ≤ 30 ppb | | 17.57 | ppb |



PerkinElmer Scientific (Thailand) Co., Ltd.
290 Soi Soonvijai 4, Bangkapi, Huay Kwang, Bangkok 10310 Head Office

น.6/19

**Thermology Co., Ltd.**
96/177-96/178 Moo 6, T. La-harn, A. Bangbuathong, Nonthaburi 11110
Tel : 0 2191 6479 Fax : 0 2191 6480 website : www.thermology.co
ilac-MRA
NSC-TISI-TIS17025
CALIBRATION 0109

# CALIBRATION CERTIFICATE

| | | | |
|---|---|---|---|
| **Date of Issue** | Jun 28, 2024 | **Cert No.** | 24/2419 |
| **Site Calibration** | | **Order No.** | 24060337 |

**Results** (without adjustment)

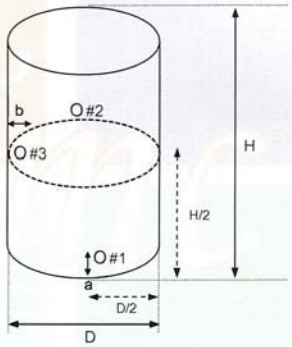


**Position of reference thermometers were placed**

**Note.**

1). Duration of the holding time was 45 minutes.

2). Stability - greatest one half of difference between max peak and min peak of each reference probe measured temperature obtained during the calibration interval.

3). Uniformity - the maximum difference of measured temperatures at any sensors and the measured temperature at the reference location which are observed at the same time or at as close an observation time as possible to determine the temperature pattern or homogeneity within the chamber under steady state conditions. The reference sensor should preferably be located at the geometric center of the chamber.



[redacted]

**Thermology Co., Ltd.**
96/177-96/178 Moo 6, T. La-harn, A. Bangbuathong, Nonthaburi 11110
Tel : 0 2191 6479 Fax : 0 2191 6480 website : www.thermology.co
ilac-MRA
NSC-TISI-TIS17025
CALIBRATION 0109

# CALIBRATION CERTIFICATE

| | | | |
|---|---|---|---|
| **Date of Issue** | Jun 28, 2024 | **Cert No.** | 24/2419 |
| **Site Calibration** | | **Order No.** | 24060337 |

| | |
|---|---|
| **Customer** | Bureau Veritas AQ Lab (Thailand) Limited<br>111 Thailand Science Park<br>Moo 9 Paholyothin Rd., Klong 1, Klong Luang, Pathumthani 12120 Thailand |
| **Place of Calibration** | Prepare Culture Media |
| **Description** | Autoclave |
| **Model** | VE-65 |
| **Serial No.** | 7202 |
| **ID.No.** | CHM000206 |
| **Date of Receipt** | Jun 26, 2024 |
| **Date of Calibration** | Jun 26, 2024 |

| **Environment** | | | | | | |
|---|---|---|---|---|---|---|
| **Temperature** | (Min) | 22.1 | °C | (Max) | 25.5 | °C |
| **Relative Humidity** | (Min) | 42.7 | %RH | (Max) | 56.3 | %RH |

**Calibration Method**

WI-22 : The reference thermometer was placing into the chamber and measurement based on BS-2646. The temperature scale in use at this laboratory is the International Temperature Scale of 1990.



[redacted]

This certificate is issued in accordance with the conditions of Thermology Laboratory.The traceability to recognised [redacted] unit of measurement realised at corresponding national standard laboratory.This certificate may not be reproduced other than in full except with the prior written approval of laboratory.

02/9/ก

Thermology Co., Ltd.
96/177-96/178 Moo 6, T. La-harn, A. Bangbuathong, Nonthaburi 11110
Tel : 0 2191 6479 Fax : 0 2191 6480 website : www.thermology.co

NSC-TISI-TIS17025
CALIBRATION 0109

# CALIBRATION CERTIFICATE

**Date of Issue** Jun 28, 2024 **Cert No.** 24/2419
**Site Calibration** **Order No.** 24060337

**The stability and uniformity was taken into account in the measurement uncertainty stated.**
**The above results are valid exclusively for calibration samples as mentioned in the report.**
**The reported expanded uncertainty is based on a standard uncertainty multiplied by a coverage factor k=2, providing a level of confidence of approximately 95%. The uncertainty evaluation has been carried out in accordance with ONAC requirements.**

**APPROVED SIGNATORY :** [redacted]



Thermology Co., Ltd.
96/177-96/178 Moo 6, T. La-harn, A. Bangbuathong, Nonthaburi 11110
Tel : 0 2191 6479 Fax : 0 2191 6480 website : www.thermology.co

NSC-TISI-TIS17025
CALIBRATION 0109

# CALIBRATION CERTIFICATE

**Date of Issue** Jun 28, 2024 **Cert No.** 24/2419
**Site Calibration** **Order No.** 24060337

**Results** (without adjustment)

| UUC Setting (°C) | UUC Reading (°C) | UUC Reading (KPa) | Reference Thermometer (°C) | | Stability ±(°C) | Uniformity (°C) | Uncertainty ±(°C) |
|---|---|---|---|---|---|---|---|
| 115.0 | 115.3 | 179.6 | Position 1 | 115.58 | 0.25 | 0.15 | 0.70 |
| | | | Position 2 | 115.58 | | | |
| | | | Position 3 | 115.48 | | | |

| UUC Setting (°C) | UUC Reading (°C) | UUC Reading (KPa) | Reference Thermometer (°C) | | Stability ±(°C) | Uniformity (°C) | Uncertainty ±(°C) |
|---|---|---|---|---|---|---|---|
| 121.0 | 121.4 | 211.0 | Position 1 | 121.59 | 0.20 | 0.13 | 0.70 |
| | | | Position 2 | 121.60 | | | |
| | | | Position 3 | 121.52 | | | |

**Standard**

1) Standard Datalogger with RTD Model. HiTemp. 140-PT S/N. R32397, Certificate No. QR23-1962, Calibrated by Quality Reborn Co., Ltd., ONAC Calibration No. 0292. Due Date Aug 07, 2024.

2) Standard Datalogger with RTD Model. HiTemp. 140-PT S/N. R32398, Certificate No. QR23-1963, Calibrated by Quality Reborn Co., Ltd., ONAC Calibration No. 0292. Due Date Aug 07, 2024.

3) Standard Datalogger with RTD Model. HiTemp. 140-PT S/N. R32399, Certificate No. QR23-1964, Calibrated by Quality Reborn Co., Ltd., ONAC Calibration No. 0292. Due Date Aug 07, 2024.

This certificate is traceable to SI unit.



[redacted]

น.6/21

**Thermology Co., Ltd.**
96/177-96/178 Moo 6, T. La-harn, A. Bangbuathong, Nonthaburi 11110
Tel : 0 2191 6479 Fax : 0 2191 6480 website : www.thermology.co

ilac-MRA
NSC-TISI-TIS17025
CALIBRATION 0109

# CALIBRATION CERTIFICATE

| | | | |
|---|---|---|---|
| **Date of Issue** | Jun 28, 2024 | **Cert No.** | 24/2418 |
| **Site Calibration** | | **Order No.** | 24060337 |

**Customer** Bureau Veritas AQ Lab (Thailand) Limited
111 Thailand Science Park
Moo 9 Paholyothin Rd., Klong 1, Klong Luang, Pathumthani 12120 Thailand

**Place of Calibration** Incubation Room

| | |
|---|---|
| **Description** | Water Bath |
| **Model** | SC100 |
| **Serial No.** | 0152187501160414 |
| **ID.No.** | CHM000205 |
| **Date of Receipt** | Jun 24, 2024 |
| **Date of Calibration** | Jun 24, 2024 |

**Environment**

| | | | | | | |
|---|---|---|---|---|---|---|
| **Temperature** | (Min) | 22.8 | °C | (Max) | 25.2 | °C |
| **Relative Humidity** | (Min) | 44.1 | %RH | (Max) | 58.5 | %RH |
| **Line Voltage** | (Min) | 227.2 | VAC | (Max) | 229.6 | VAC |

**Calibration Method**

WI-18 : The reference thermometer was placed into the chamber and measurement was performed based on AS-2853.
The temperature scale in use at this laboratory is the International Temperature Scale of 1990.

**Standard**

1) Data Acquisition with Sensor Model 34972A S/N. MY49007789, Certificate No. QR24-0186, Calibrated by Quality Reborn Co., Ltd., ONAC Calibration No. 0292. Due Date Jan 23, 2025.

This certificate is traceable to SI unit.



[redacted]

This certificate is issued in accordance with the conditions of Thermology Laboratory.The traceability to recognise[redacted] unit of measurement realised at corresponding national standard laboratory.This certificate may not be reproduced other than in full except with the prior written approval of laboratory.

[redacted]

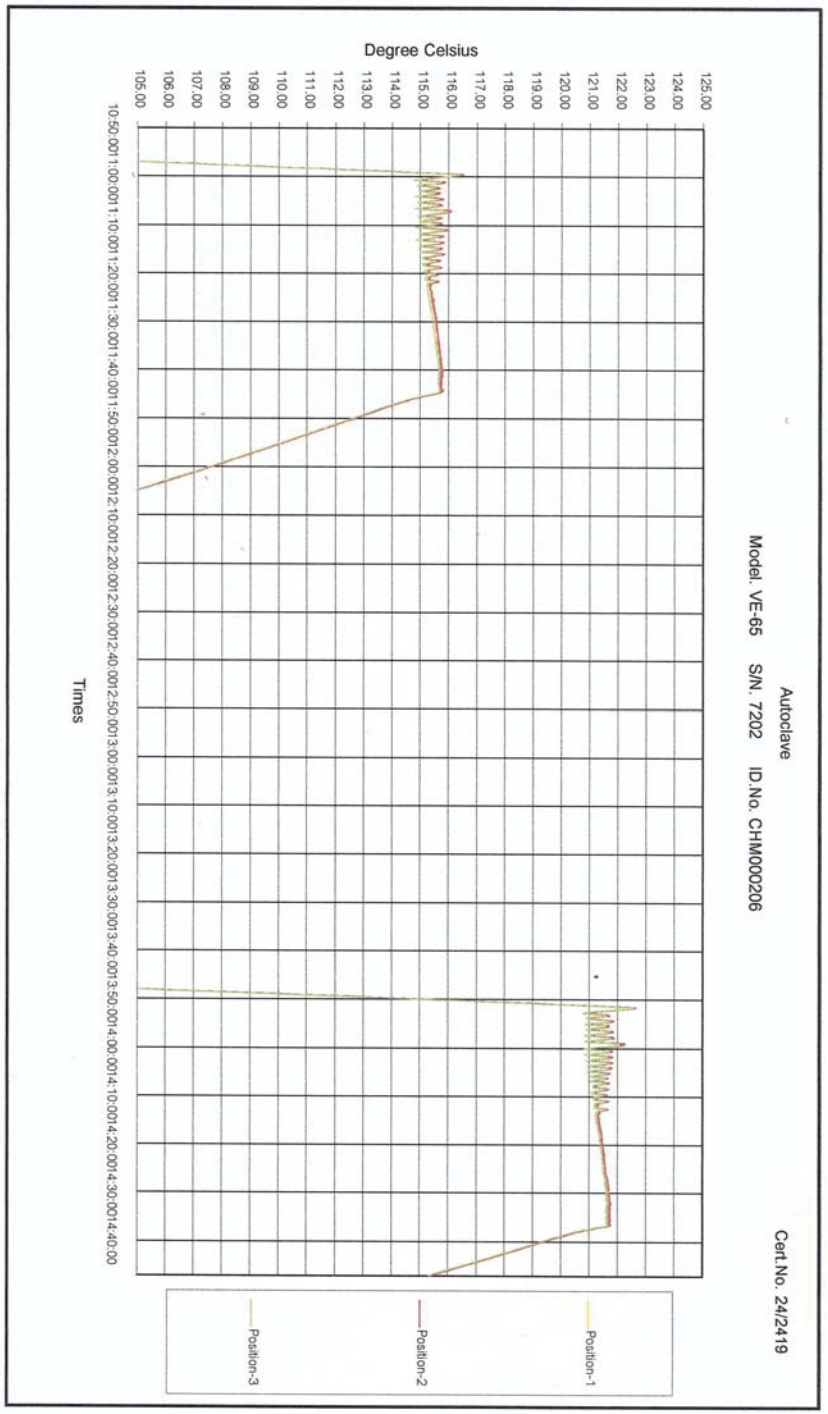

**Thermology Co., Ltd.**
96/177-96/178 Moo 6, T. La-harn, A. Bangbuathong, Nonthaburi 11110
Tel : 0 2191 6479 Fax : 0 2191 6480 website : www.thermology.co

ilac-MRA
NSC-TISI-TIS17025
CALIBRATION 0109

# CALIBRATION CERTIFICATE

**Date of Issue** Jun 28, 2024 **Cert No.** 24/2418
**Site Calibration** **Order No.** 24060337

**Results** (without adjustment)

| Cal Point (°C) | UUC Setting (°C) | UUC Reading (°C) | Reference Thermometer (°C) | | Stability ±(°C) | Uniformity (°C) | Uncertainty ±(°C) |
|---|---|---|---|---|---|---|---|
| 44.5 | 44.5 | 44.5 | Position 1 | 44.490 | 0.020 | 0.043 | 0.13 |
| | | | Position 2 | 44.494 | | | |
| | | | Position 3 | 44.491 | | | |
| | | | Position 4 | 44.499 | | | |
| | | | Position 5 | 44.503 | | | |

**The stability and uniformity was taken into account in the measurement uncertainty stated.**
**The above results are valid exclusively for calibration samples as mentioned in the report.**
**The reported expanded uncertainty is based on a standard uncertainty multiplied by a coverage factor k=2, providing a level of confidence of approximately 95%. The uncertainty evaluation has been carried out in accordance with ONAC requirements.**

**APPROVED SIGNATORY :** [redacted]



**Thermology Co., Ltd.**
96/177-96/178 Moo 6, T. La-harn, A. Bangbuathong, Nonthaburi 11110
Tel : 0 2191 6479 Fax : 0 2191 6480 website : www.thermology.co

ilac-MRA
NSC-TISI-TIS17025
CALIBRATION 0109

# CALIBRATION CERTIFICATE

**Date of Issue** Jun 28, 2024 **Cert No.** 24/2418
**Site Calibration** **Order No.** 24060337

**Results** (without adjustment)

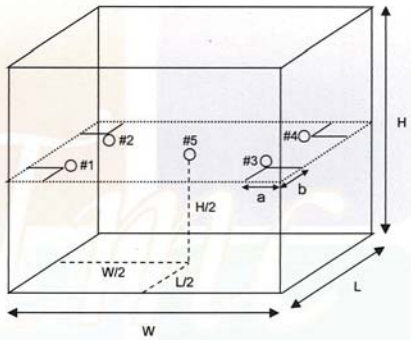


**Position of reference thermometers were placed**

**Note.**

1). Dimension (W x L x H) is 30 x 34 x 20 cm.

2). Stability - greatest one half of difference between max peak and min peak of each reference probe measured temperature obtained during the calibration interval.

3). Uniformity - the maximum difference of measured temperatures at any sensors and the measured temperature at the reference location which are observed at the same time or at as close an observation time as possible to determine the temperature pattern or homogeneity within the chamber under steady state conditions. The reference sensor should preferably be located at the geometric center of the chamber.



[redacted]

4.6/23

**Thermology Co., Ltd.**
96/177-96/178 Moo 6, T. La-harn, A. Bangbuathong, Nonthaburi 11110
Tel : 0 2191 6479 Fax : 0 2191 6480 website : www.thermology.co

ilac-MRA
NSC-TISI-TIS17025
CALIBRATION 0109

# CALIBRATION CERTIFICATE

| | | | |
|---|---|---|---|
| **Date of Issue** | Jun 28, 2024 | **Cert No.** | 24/2415 |
| **Site Calibration** | | **Order No.** | 24060337 |

**Customer** Bureau Veritas AQ Lab (Thailand) Limited
111 Thailand Science Park
Moo 9 Paholyothin Rd., Klong 1, Klong Luang, Pathumthani 12120 Thailand

**Place of Calibration** Incubation Room

| | |
|---|---|
| **Description** | Incubator |
| **Model** | IN110 |
| **Serial No.** | D415.0797 |
| **ID.No.** | CHM000181 |
| **Date of Receipt** | Jun 24, 2024 |
| **Date of Calibration** | Jun 24, 2024 |

**Environment**

| | | | | | | |
|---|---|---|---|---|---|---|
| **Temperature** | (Min) | 22.8 | °C | (Max) | 25.2 | °C |
| **Relative Humidity** | (Min) | 44.1 | %RH | (Max) | 58.5 | %RH |

**Calibration Method**

WI-17 : The reference thermometer was placed into the chamber and measurement was performed based on AS-2853.
The temperature scale in use at this laboratory is the International Temperature Scale of 1990.

**Standard**

1) Data Acquisition with Sensor Model 34972A S/N. MY49010059, Certificate No. QR24-0874, Calibrated by Quality Reborn Co., Ltd., ONAC Calibration No. 0292. Due Date Apr 24, 2025.

This certificate is traceable to SI unit.



[redacted]

This certificate is issued in accordance with the conditions of Thermology Laboratory.The traceability to recognised national standard and the unit of measurement realised at corresponding national standard laboratory.This certificate may not be reproduced other than in full except with the prior written approval of laboratory.

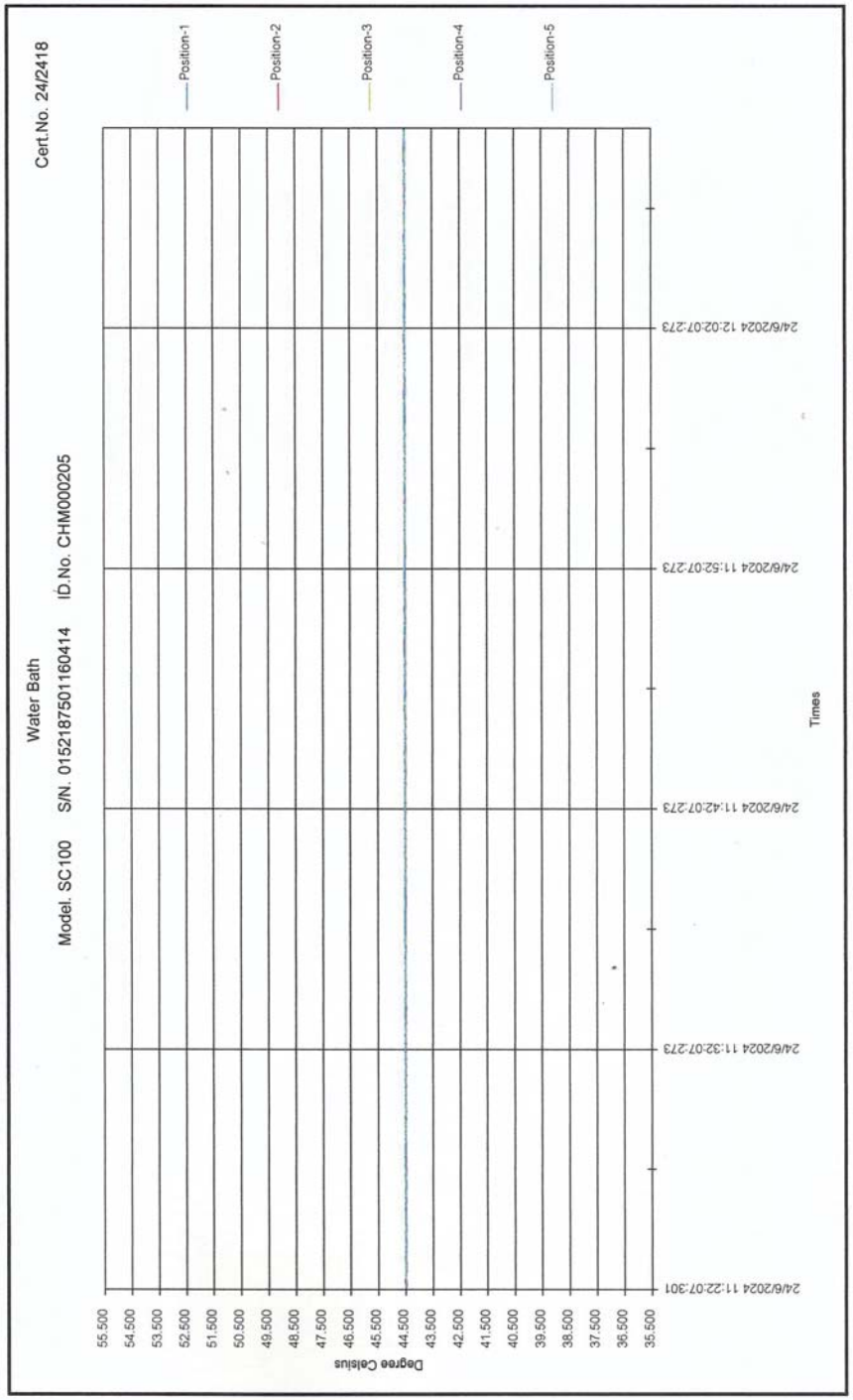


24/9/ท

**Thermology Co., Ltd.**
96/177-96/178 Moo 6, T. La-harn, A. Bangbuathong, Nonthaburi 11110
Tel : 0 2191 6479 Fax : 0 2191 6480 website : www.thermology.co
ilac-MRA
NSC-TISI-TIS17025
CALIBRATION 0109

# CALIBRATION CERTIFICATE

**Date of Issue** Jun 28, 2024 **Cert No.** 24/2415
**Site Calibration** **Order No.** 24060337

**Results** (without adjustment)

| Cal Point (°C) | UUC Setting (°C) | UUC Reading (°C) | Reference Thermometer (°C) | | Stability ±(°C) | Uniformity (°C) | Uncertainty ±(°C) |
|---|---|---|---|---|---|---|---|
| 35.0 | 35.0 | 35.0 | Position 1 | 35.138 | 0.067 | 0.253 | 0.30 |
| | | | Position 2 | 35.099 | | | |
| | | | Position 3 | 35.075 | | | |
| | | | Position 4 | 35.187 | | | |
| | | | Position 5 | 35.173 | | | |
| | | | Position 6 | 34.988 | | | |
| | | | Position 7 | 34.878 | | | |
| | | | Position 8 | 34.965 | | | |
| | | | Position 9 | 34.970 | | | |

**The stability and uniformity was taken into account in the measurement uncertainty stated.**
**The above results are valid exclusively for calibration samples as mentioned in the report.**
**The reported expanded uncertainty is based on a standard uncertainty multiplied by a coverage factor k=2, providing a level of confidence of approximately 95%. The uncertainty evaluation has been carried out in accordance with ONAC requirements.**

**APPROVED SIGNATORY :** [redacted]



**Thermology Co., Ltd.**
96/177-96/178 Moo 6, T. La-harn, A. Bangbuathong, Nonthaburi 11110
Tel : 0 2191 6479 Fax : 0 2191 6480 website : www.thermology.co
ilac-MRA
NSC-TISI-TIS17025
CALIBRATION 0109

# CALIBRATION CERTIFICATE

**Date of Issue** Jun 28, 2024 **Cert No.** 24/2415
**Site Calibration** **Order No.** 24060337

**Results** (without adjustment)

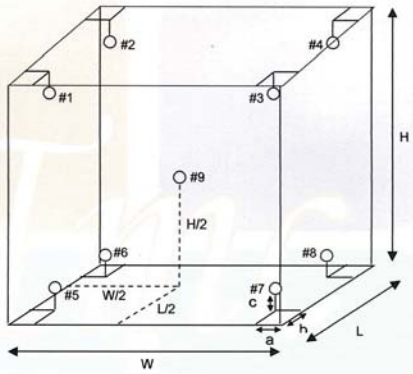


**Position of reference thermometers were placed**

**Note.**

1). Dimension (W x L x H) is 56 x 40 x 48 cm.

2). Stability - greatest one half of difference between max peak and min peak of each reference probe measured temperature obtained during the calibration interval.

3). Uniformity - the maximum difference of measured temperatures at any sensors and the measured temperature at the reference location which are observed at the same time or at as close an observation time as possible to determine the temperature pattern or homogeneity within the chamber under steady state conditions. The reference sensor should preferably be located at the geometric center of the chamber.



[redacted]

น.6/25

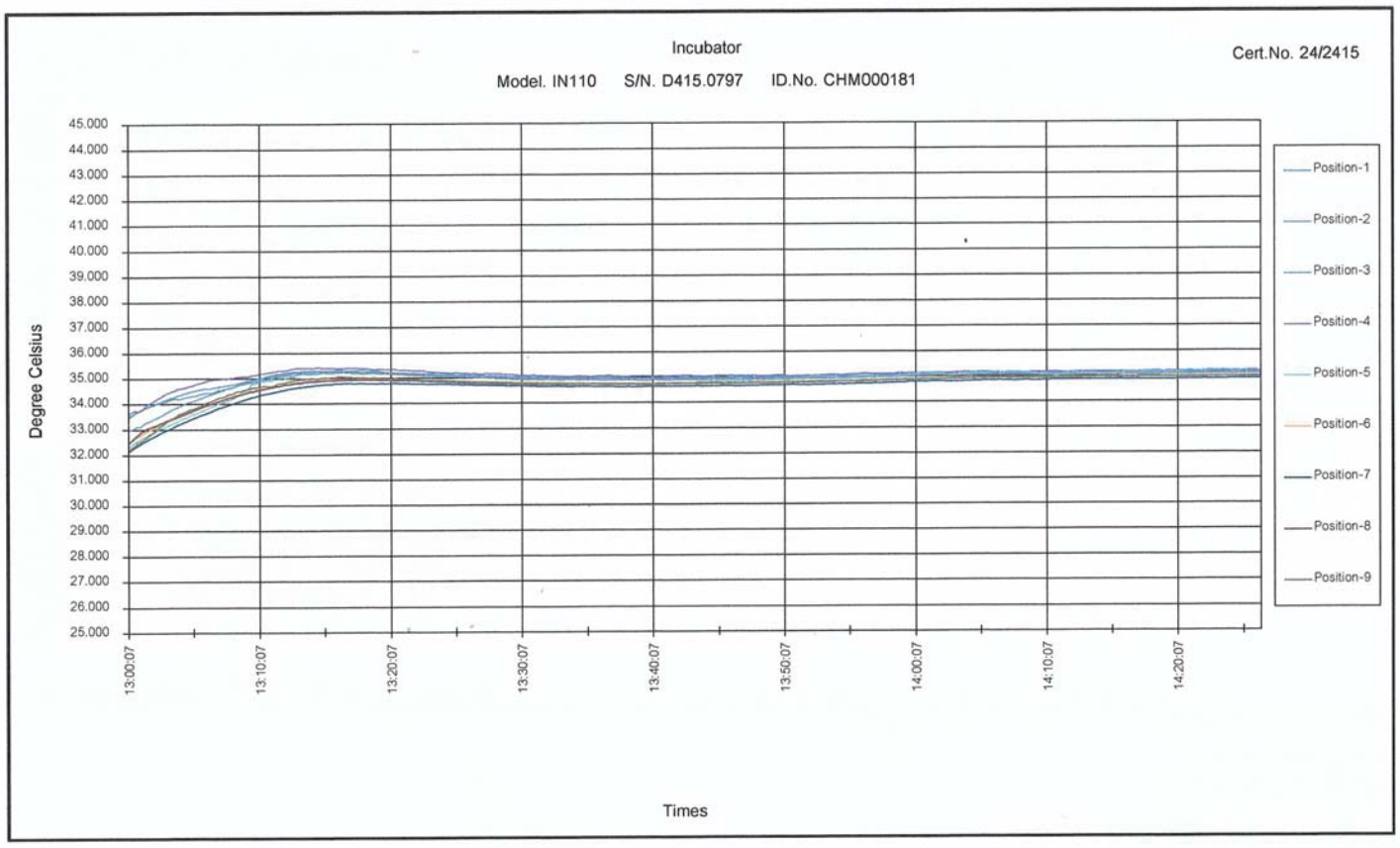
Incubator
Cert.No. 24/2415
Model. IN110 S/N. D415.0797 ID.No. CHM000181
Degree Celsius
45.000
44.000
43.000
42.000
41.000
40.000
39.000
38.000
37.000
36.000
35.000
34.000
33.000
32.000
31.000
30.000
29.000
28.000
27.000
26.000
25.000
13:00:07
13:10:07
13:20:07
13:30:07
13:40:07
13:50:07
14:00:07
14:10:07
14:20:07
Times
Position-1
Position-2
Position-3
Position-4
Position-5
Position-6
Position-7
Position-8
Position-9

[redacted]